VILLAGE OF ANGEL FIRE
Angel Fire NM 87710
(575) 377-3232
PUBLIC NOTICE
Council Meeting
Tuesday January 12th, 2016 at 5:30pm at Village Hall

Call to Order
Pledge of Allegiance
Roll Call
Approval of Agenda
Approval of Consent Agenda

1. **Approval of the December 15th Council Work Session Minutes**
2. **Approval of the December 15th Regular Council Meeting Minutes**
3. **Approval of the December 28th Special Council Meeting Minutes**
4. **Approval of the Precinct Board for the March 1st 2016 Election**

Requests and Responses from the Audience (Limited to 3 minutes)
Announcements and Proclamation
Reports

1. **Governing Body Report**
2. **Manager's Report**
3. **Staff Report**

Old Business - None
New Business

A. **Discussion/ Approval of Resolution 2016-01 a Resolution Establishing the Open Meeting Resolution and Rescinding All Others**
B. **Discussion/ Approval of Resolution 2016-02 a Resolution Authorizing the Donation of a 10 Acre Tract of Village Land Near the Vietnam Veterans Memorial State Park to the State of New Mexico for a Veterans' Cemetery and Further Authorizing /Ratifying the Mayor's Execution of the Real Property Donation Agreement With the State of New Mexico Relating Thereto**
C. **Discussion/ Approval to Reinstate the Cut Position in the Fire Department Budget and Hire a Full-Time Fire Fighter /EMT/Emergency Manager**
D. **Discussion / Approval of a Grant Application for a Equipped New 4x4 Structure Engine ,Estimated Value of $600,000**
E. **Discussion/ Approval of an RFP for General Engineering Services**
F. **Discussion/Approval to Accept a Contract with the Forest Guild for the Update of our Community Wildfire Protection Plan**
G. **Discussion/ Approval to Accept Angel Fire Public Improvement District (PID) as our Fiscal Agent for the Severance Tax Bond**

Terry Cordova, Village Clerk **Barbara Cottam, Mayor**

Post: 01/07/2016

THE PUBLIC IS INVITED TO ATTEND
Next Regular Council meeting will be: January 26th,2016 at 5:30 pm
Subject to Change Until: Friday January 8th,2016 at 5:30pm

AGENDA MAY BE PICKED UP AT THE VILLAGE HALL
3388 MOUNTAIN VIEW BLVD., ANGEL FIRE, NM 87710
AGENDA MAY ALSO BE VIEWED AT OUR WEBSITE: ANGELFIRENM.GOV
IF YOU ARE AN INDIVIDUAL WHO IS IN NEED OF ANY AUXILIARY AID OR SERVICE TO ATTEND THE MEETING ,PLEASE CONTACT THE VILLAGE CLERKS OFFICE 48 HOURS PRIOR TO THE MEETING .

VILLAGE OF ANGEL FIRE
Council Work Session Minutes
Tuesday December 15th, 2015 at the Village Hall
DRAFT

Call to Order
Mayor Cottam called the meeting to order at 3:30 PM
Pledge of Allegiance
Mayor Cottam called for the Pledge of Allegiance.
Roll Call
Present were Mayor Cottam, Mayor Pro-tem Howe, Councilor Germscheid, Councilor Lanon, Councilor Colenda . Also present were Village Manager Richard Tafoya, Village Clerk Terry Cordova. A quorum was present.
Approval of Agenda
Mayor Pro-tem Howe made the motion to approve the agenda, Councilor Lanon seconded. Motion carried 4-0

1. **Introduction of New Employees**
   Mayor Cottam introduced new village employees
2. **Presentation by Paul Cassidy with RBC Capital**
   Paul Cassidy with RBC Capital have a financial update (see attached)
3. **Presentation by Chief Andy Bertges Requesting Consideration to Hire Additional Staff for Emergency Management Position (Discussion Only)**
   Andy Bertges , Fire Chief went over the reasons for hiring a Emergency Manager (see attached)

Adjournment
Mayor Cottam adjourned the meeting at 5:11pm

Passed, Approved and Adopted on this 12th day in January, 2016

_____
Barbara Cottam, Mayor

ATTEST:

_____
Terry Cordova, Village Clerk

VILLAGE OF ANGEL FIRE
Council Regular Meeting Minutes
Tuesday December 15th, 2015 at the Village Hall
DRAFT

Call to Order
Mayor Cottam called the meeting to order at 5:30 PM
Pledge of Allegiance
Mayor Cottam called for the Pledge of Allegiance.
Roll Call
Present were Mayor Cottam, Mayor Pro-tem Howe, Councilor Germscheid, Councilor Lanon, Councilor Colenda. Also present were Village Manager Richard Tafoya, and Village Clerk Terry Cordova. A quorum was present.
Approval of Agenda
Mayor Pro-tem Howe made the motion to approve the agenda. Councilor Germscheid seconded. Motion carried 4-0
Approval of Consent Agenda
1. Approval of November 17th Regular Council Meeting Minutes
Mayor Pro-tem Howe made the motion to approve the consent agenda, Councilor Lanon seconded .Motion carried 4-0
Requests and Responses from the Audience (Limited to 3 minutes)
1. **James Marlin** –Gave his support of the Family Dollar store
2. **Rick Sprott**- Gave an update on the work being done by the wildfire protection committee

Announcements and Proclamations
Reports:
a. **Governing Body Report**
Councilor Lanon reported that the exist meeting for the 2015 audit went very well and that the village will be turning its audit for 2015 on time.
Mayor Cottam stated that with Stuart Hamilton leaving the valley there would be an opening of the hospital board and that they were looking for volunteers.
b. **Manager's Report**
Manager Tafoya reported on the NM City Managers Assoc. Winter Conference held earlier this month in Albuquerque. (See attached)
c. **Staff Reports**
Tracy Orr, Grants and Projects gave an update on the Clean Water State Revolving Fund for 2016
Brad McCaslin, Police Chief gave an update on the police department (see attached)
Bret Weir, Finance Manager gave a report on the finance department (see attached)
Burl Smith, Building Inspector reported the the New Mexico Flood Plain conference will be held here in 2017.

Old Business-None
New Business

A. **County Update with County Commissioner Landon Newton**
Landon Newton, County Commissioner introduced the following people from the county Chairmen Sabo, Commissioner Fernandez, Linda Gallegos, County Assessor, Rebecca Hoy, Deputy County Clerk. Commissioner Newton reported on the revenues and expenses for the county, thanked the village for their support with the underwater MOU, said the county would continue working on a state wide EMS system. Went over some of the items that are on the counties ICIP. Invited the council to Colfax County Day at the legislature that will be held February 1st 2016. He also reported that county manger Patricia Gonzalez has an office at the airport and is there Wednesday and Thursday from 8 to 5.

B. Discussion/ Approval of Municipal Finance Advisor Services with RBC Capital

Tracy Orr, Grants and Projects explained that the village has solicited quotes for the purpose of selecting a qualified financial advisor to assist the village with a variety of complex and high level financial services related to analysis, monitoring and reporting of financial performance of the village. These services will include the analysis of the village general fund, enterprise debt structure, village tax rate and fee structures as well as identification of alternative funding opportunities. We are procuring the financial advisor contract under small purchases per New Mexico statue 13-1-125 A &B. The contract will be for fiscal year 2015-2016 and may be extended up to three years. Mayor Pro-tem Howe made the motion to approve a municipal financial advisor services with RBC Capital Markets with the following changes, 1. 12 months not 48 and will be for one year and may be extended for three years, 2. Removal of the first paragraph on the fee schedule, 3. Adding to item 1 on fee schedule: and only upon mutual agreement in writing between the issuer and RBC Capital before and work is started, 4. adding to item 6 on fee schedule: upon mutual agreement in writing between the issuer and RBC Capital before any work is started. Councilor Colenda seconded. With no further discussion the motion carried 4-0

C. Discussion/ Approval to Purchase a New Grapple Truck

Amos Torres, Public Works Director explained that the solid waste department has requested a quote for the grapple truck utilizing two separate pricing agreements. The cab/chassis will be with state NMDOT contract Rush Truck Centers in the amount of $93,577.00 and the body/loader with all required components will be with NJPA Peterson Industries in the amount of $66,116.04 for a total amount of $159,693.04. The purchase will be made using the 525 wildfire protection fund account. Mayor Pro-tem Howe made the motion to approve the purchase of a grapple truck in the amount totaling $159,693.04 utilizing NMDOT contract #22-000-00105 and NJPA contract #070313 PIL. Councilor Germscheid seconded. With no further discussion the motion carried 4-0

D. Discussion / Approval of Resolution 2015-44 a Resolution to Approve the Budget Adjustment Requests for the Second Quarter of the 2016 Fiscal Year

Bret Weir, Finance Manager explained that there were several needed changes to the 2015-2016 fiscal budget. These changes are a result of unanticipated and unbudgeted revenues and expenses that the village has encountered in the second quarter of the year. Several of the requested changes are due to emergency situations and the expenses have already been expended. Mayor Pro-tem Howe made the motion to approve resolution 2015-44 a resolution to approve the budget adjustments requests for the second quarter of the 2016 fiscal year. Councilor Germscheid seconded. With no further discussion the motion carried 4-0 with Mayor-Pro-tem Howe –aye, Councilor Germscheid –aye, Councilor Lanon-aye, Councilor Colenda –aye.

E. Discussion/ Approval of Resolution 2015-45 a Resolution Amending Resolution Amending Resolution 2003-07 Establishing Standards for Village Fleet Identification

Burl Smith , Building Inspector explained that he is requesting that the building department vehicles to be gray as the standard village vehicles are white and that street departments are red and that these colors are set by resolution . Mayor Pro-tem Howe made the motion to approve resolution 2015-45 a resolution amending resolution 2003-07 establishing standards for village vehicles fleet identification. Councilor Lanon seconded. With no further discussion the motion was carried 4-0 with Mayor Pro-tem Howe –aye, Councilor Germscheid –aye, Councilor Lanon-aye, Councilor Colenda –aye.

F. Discussion / Approval of Resolution 2015-46 a Resolution Granting Site Plan Approval for a Family Dollar on a Portion of Lot 50,Moreno Valley Land 3rd Subdivision

Burl Smith , Building Inspector explained that John Burkhardt Engineering ,representing Triple C Development ,Inc. has submitted a site plan for a Family Dollar Store generally located south of Highway 434,north of the Seaton Building . This 1.23 acre tract of land is zoned C-1 commercial, retail commercial district and is in the MVB overlay district. The Planning and Zoning sends a positive recommendation. Mayor Pro-tem Howe made the motion to approve resolution 2015-46 a resolution granting site plan approval for a Family Dollar store on a portion of lot 50 Moreno Valley land 3rd subdivision. Councilor Colenda seconded. With no further discussion the motion carried 4-0 with Mayor Pro-tem Howe –aye, Councilor Germscheid –aye, Councilor Lanon-aye, Councilor Colenda –aye.

G. **Discussion/ Approval of Resolution 2015-47 a Resolution Granting a Front Yard Setback of Twenty One Feet Six Inches for an Addition Located at 121 Panorama Way**

Burl Smith, Building Inspector explained that Brent Dunn is requesting a variance to place a small entry way addition on the front of his house at 121 Panorama Way. Mr. Dunn would like to put the addition over the current walkway deck that was there when he purchased the property. This home is on a very steep lot and the road is not centered in the right of way. Planning and Zoning sends a positive recommendation. Mayor Pro-tem Howe made the motion to approve resolution 2015-47 a resolution granting a front yard setback of twenty one feet six inches for an addition located at 121 Panorama Way. Councilor Germscheid seconded. With no further discussion the motion carried 4-0 with Mayor Pro-tem Howe-aye, Councilor Germscheid –aye, Councilor Lanon-aye, Councilor Colenda-aye.

Adjournment

Mayor Cottam adjourned the meeting at 6:52PM

Passed, Approved and Adopted on this 12th day in January, 2016

Barbara Cottam, Mayor

ATTEST:

Terry Cordova, Village Clerk

Manager's Report 12/15/2015

On Dec. 2-4 I attended the NM City Management Assoc. Winter Conference in ABQ.

It was a very good conference. The most meaningful topics for me specifically were fraud prevention and the business meeting for the Association where they discussed and passed a motion asking the NM Tax & Rev. for a more accurate and timely way for municipalities to receive GRT information and services.

Village of Angel Fire
Council Meeting
December 15, 2015

Finance Department Report

The council was informed that the 2014-2015 Audit was submitted on time. This was the first time in a decade an audit was submitted on time. The council was informed that we were required to commit to a date that each audit finding would be corrected. We had committed that each finding would be addressed no later than June 30, 2016. An updated BAR for the Wild Land Fires fund was distributed. The council was informed that the Finance Department was running behind on monthly revenue and expense reports due to the audit. We hope to be caught up by the first of the year.

Bret E. Wier
Finance Manager

ANGEL FIRE
POLICE DEPARTMENT
3465 MOUNTAIN VIEW BLVD
ANGEL FIRE, NM 87710

Calls For Service Totals By Call Type

11/01/2015 to 11/30/2015

Call Type		Totals
10-44	Property Accident	1
10-54	Traffic Contact	1
10-57	Drunk Person	1
10-89	Welfare Check	1
AOA	Assist Other Agency	6
CIVSTBY	Civil Standby	2
HW	House Watch	2
INFORMAT	Informational	3
JUVY	Juvenile Problem	2
LARCENY	Larceny	1
PARKING	Parking Problem	1
ROV	Violation of Order of Protection	1
S21	Burglary	3
S21V	Burglary of Vehicle	1
S22D	Domestic	1
S35	Narcotics	1
S40	Alarm	3
S52	Assault	2
S57	Fraud	3
S66	Lost / Found Property	1
	Grand Total for all calls	37

ANGEL FIRE
POLICE DEPARTMENT
3465 MOUNTAIN VIEW BLVD
ANGEL FIRE, NM 87710

Citation Totals By Violation

11/01/2015 to 11/30/2015

Violation		Total
12-10-1.5	No Headlamps	1
12-10-1.6(A)	DIMMING OF HEADLIGHTS	1
12-10-4(C)	EXPIRED REGISTRATION	3
12-10-6(B)	UNINSURED MOTOR VEHICLE	1
12-6-1.1	SPEEDING	2
12-6-12.4	CARELESS DRIVING	1
12-6-12.6(A)(7)	DRIVING ON A REVOKED LICENSE	1
30-15-1	CRIMINAL DAMAGE TO PROPERTY	1
30-3-18	CRIMINAL DAMAGE PROPERTY OF HOUSEHO	1
30-3-4	BATTERY	1
30-3-9.2	BATTERY OF HEALTHCARE WORKER	1
5-2B-1(B)	BATTERY	1
	Grand Total	15

ANGEL FIRE
POLICE DEPARTMENT
3465 MOUNTAIN VIEW BLVD
ANGEL FIRE, NM 87710

Arrest Totals By Violation

11/01/2015 TO 11/30/2015

Violation		Total
12-6-12.6(A)...	DRIVING ON A REVOKED LICENSE	1
30-15-1	CRIMINAL DAMAGE TO PROPERTY	2
30-20-1	DISORDERLY CONDUCT	1
30-22-1	RESISTING	1
30-22-24	BATTERY ON PEACE OFFICER	1
30-3-4	BATTERY	2
40-13-6	VIOLATION OF ORDER OF PROTECTION	1
5-2B-1(B)	BATTERY	1
	Grand Total	10

VILLAGE OF ANGEL FIRE
Special Council Meeting Minutes
Monday December 28th, 2015 at the Village Hall
DRAFT

Call to Order
Mayor Cottam called the meeting to order at 12:10 PM
Pledge of Allegiance
Mayor Cottam called for the Pledge of Allegiance.
Roll Call
Present were Mayor Cottam, Mayor Pro-tem Howe, Councilor Germscheid, Councilor Lanon, Councilor Colenda. Also present were Village Manager Richard Tafoya, Village Clerk Terry Cordova. A quorum was present.
Approval of Agenda
Mayor Pro-tem Howe made the motion to approve the agenda, Councilor Lanon seconded. Motion carried 4-0

New Business

A. **Discussion/Approval of Resolution 2015-48 a Resolution Approving a Clean Water State Revolving Fund Loan and Grant Combination Funding Package**
Tracy Orr, Grants and Projects explained that the Clean Water State Revolving Fund has awarded the Village a grant /loan program to replace the existing ultraviolet disinfection equipment and retrofit the existing mechanical bar screen with an auger style screening mechanism. The grant /loan program is for $ 582,500. The funding package offered by CWSRF will consist of a grant in the amount of $192,225 and a loan of 390,275. Jennifer Prada, the CWSRF program administrator sent me four amortization tables 5 years, 10years, 15 years, and 20 years for our review. The Village has until January 6th, 2016 to accept or decline this offer. Mayor Pro-tem Howe made the motion to approve resolution 2015-48 to accept the clean water state revolving fund loan and grant funding package. Councilor Lanon seconded. Bret Weir, Finance Manager recommended that the village use the 20year amortization table and that will give us room to double up on payments when we can. With no further discussion the motion carried 4-0 with Mayor Pro-tem Howe-aye, Councilor Germscheid –aye, Councilor Lanon-aye, Councilor Colenda –aye.

Adjournment
Mayor Cottam adjourned the meeting at 12:17pm

Passed, Approved and Adopted on this 12th day in January, 2016

_____
Barbara Cottam, Mayor

ATTEST:

_____
Terry Cordova, Village Clerk

VILLAGE OF ANGEL FIRE
January 12, 2016

Designation of election officials and polling place to be used in the March 1, 2016 Municipal Election, is as approved;

Angel Fire Community Center
15 CS Ranch Road
Angel Fire, NM 87710

<u>Precinct Board for Polling Place</u>

Presiding Judge	**Rick Sprott**
Election Judge/Clerk	**Cindy Sprott**
Election Clerk	**Carolyn Byrd**
Election Clerk	**Bob Byrd**
Alternate	**Janet Sailor**

Terry Cordova, Village Clerk **Barbra Cottam, Mayor**

VILLAGE OF ANGEL FIRE, NEW MEXICO

RESOLUTION 2016-01

A RESOLUTION ESTABLISHING THE OPEN MEETING RESOLUTION AND RESCINDING ALL OTHER OPEN MEETING RESOLUTIONS

WHEREAS, Section 10-15-1-B, NMSA provides that "All meetings of a quorum of members of any board, commission or other policy-making body of any state agency, or any agency of authority of any county, municipality, district of any political subdivision held for the purpose of formulating public policy, discussing public business or for the purpose of taking any action within the authority of or the delegated authority for such board, commission or other policy making body, are declared to be public meetings open to the public at all times, except as otherwise provided in the constitution or the provision of the Open Meetings Act" ; and

WHEREAS, Section 10-15-3-A, NMSA 1978, provides that "No resolution, rule, regulation, ordinance or action of any board, commission, committee or other policy-making body shall be valid unless taken or made at a meeting held in accordance with the requirements of Section 10-5-1, NMSA 1978"; and

WHEREAS, Section 10-15-14, NMSA 1978, provides that "Any person violating any of the provisions of Section 10-15-1 NMSA 1978 is guilty of a petty misdemeanor and upon conviction shall be punished by a fine of not more than five hundred dollars ($500.00) for each offense"; and

WHEREAS, Section 10-15-1-C, requires that "any such meeting at which the discussion of adoption of any proposed resolution, rule, regulation or formal action occurs, and at which a majority or quorum of the body is in attendance, and any closed meetings, shall be held only after reasonable notice to the public. The affected body shall determine that at least annually in the public meeting that notice for public meeting shall be reasonable when applied to such body.

NOW, THEREFORE, BE IT RESOLVED by the Governing Body of the Village of Angel Fire, New Mexico that:

1. Notice shall be given at least five (5) days in advance of any regular meeting of a quorum of the members of the governing body or any board, commission, committee, agency, authority, or other policy-making body held for the purpose of discussing public business or taking any formal action within the authority of such body.

2. Notice shall be given at least 72 hours in advance of any special meeting of a quorum of the members of the governing body or any board, commission, committee, agency, authority, or any other policy-making body held for the purpose of discussing public business of taking any formal action within the authority of such body.

3. The regularly scheduled meetings of the governing body will be held at 5:30 P.M. on the second (2) and fourth (4) Tuesday of each month at the Angel Fire Meeting Room located in Angel Fire. In the event that the regular meeting date falls on a legal holiday or cannot be held as prescribed above, the governing body shall designate an alternate meeting date and/or time at the regular meeting prior to the holiday and shall cause advance notice of the changed meeting date and/or time to be published as provided in this Resolution. In the event that a regular meeting of the governing body is changed to a different time or location, advance notice of the meeting location shall be published as provided in this Resolution.

4. The regularly scheduled meetings for the Planning and Zoning Commission will be held at 5:00 P.M. on the first (1st) Thursday of each month at the Angel Fire Meeting Room located in Angel Fire. In the event that the regular meeting date falls on a legal holiday, the commission shall designate an alternate meeting date and/or time at the regular meeting prior to the holiday and shall cause advance notice of the changed meeting date and/or time to be published as provided in this Resolution. In the event that a regular meeting of the governing body is

changed to a different location, advance notice of the meeting location shall be published as provided in this Resolution.

5. The notice requirements of Section 1, 2 and 3 of this Resolution are complied with if notice of the date, time and subject matter of any regular or special meeting are printed in a newspaper which maintains an office in the municipality and is of general circulation within the municipality or, if such newspaper is a non-daily paper which will not be circulated to the public in time to meet publication requirements or if there is no newspaper which maintains an office in the municipality and is of general circulation within the municipality, then "publish" or "publication" means positing in six public places within the municipality on the first day that publication is required in a newspaper which maintains an office in the municipality and is of general circulation within the municipality. One of the public place where posting shall be made is in the office of the municipal clerk who shall maintain the posting during the length of time necessary to comply with the provisions relating to the number of times publication is required in a newspaper of general circulation within the municipality. The municipal clerk may, in addition to posting, publish one or more times in the newspaper of general circulation in the municipality.

6. Notwithstanding with other provisions of Section 1 through 3 of this Resolution, the governing authority may establish such additional notice requirements as may be deemed proper and advisable to comply with the provisions of the Open Meeting Act.

7. If any meeting is closed pursuant to exclusions contained in Section 10-15-1, Subsection E, NMSA 1978, such closed meeting called by a policy-making body, shall not be held until public notice shall state the exclusion or exclusions in Section 10-15-1, subsection E, NMSA 1978 of the Open Meetings Act, under which such closed meeting called by a policy-making body, shall not be held until the public notice shall state the exclusion or exclusions in Section 10-15-1, Subsection E, NMSA 1978 of the Open Meetings Act, under which such closed meeting is permitted.

8. Notwithstanding any other provision of Section 1 through 6 of this Resolution, the governing authority of the Village of Angel Fire, may call, with whatever notice is possible under the circumstances, a meeting of the governing body of the municipality to consider or act on any emergency matter which appears to be clear and immediate danger to the health, welfare or safety of the inhabitants of the Village of Angel Fire.

9. A member of the governing body may participate and be included in a meeting for the transaction of business by the governing body by means of a conference telephone or other similar telecommunication device when it is difficult or impossible for the member to attend a meeting in person. In order for telephone participation to satisfy the Open Meetings Act and this resolution, each member participating by conference telephone must be capable of being identified when speaking, all participants must be able to hear each other at the same time and members of the public attending the meeting must be able to hear any member of the public body who speaks during the meeting.

PASSED, ADOPTED, AND APPROVED this 12th day of January 2016.

_____

Barbara Cottam, Mayor

ATTEST:

_____

Terry Cordova, Village Clerk

Village of Angel Fire

Resolution No. 2016 - 02

A Resolution Authorizing the Donation of a 10 Acre Tract of Real Property from the Village of Angel Fire To the State of New Mexico for the Purpose of a Veterans' Cemetery and Authorizing and Ratifying the Mayor's Execution of the Real Property Donation Agreement with the State of New Mexico Attached Hereto (Attachment I)

WHEREAS, the Village of Angel Fire and its residents have supported Governor Susana Martinez's initiative being the Governor's State Veterans' Cemetery Program to provide for federally-rated final resting places that are closer to home for our state's veterans, and

WHEREAS, the Village of Angel Fire supported in the past, through Resolutions 2014-17 and 2013-33, a veterans cemetery to be located next to the existing Vietnam Veterans Memorial State Park, Angel Fire, New Mexico; and

WHEREAS, Harry Patterson and Stan Samuels have donated 10 acres located adjacent to the existing Vietnam Veterans Memorial State Park for this project and have transferred title to said 10 acre tract of real property to the Village of Angel Fire in November 2015 through the David Westfall Veterans Foundation, Inc. with Colfax County approval therefor such transfer of land for a veterans' cemetery; and

WHEREAS, Governor Susana Martinez has selected Angel Fire as a New Mexico site on which to plan, design, and construct a regional veterans' memorial cemetery; and

WHEREAS, this donation of this real property is being conducted legally in accordance with applicable New Mexico State Statutes and Administrative Codes, and in compliance with NMSA 1978, § 3-54-2(D) with approval by the New Mexico Department of Finance and Administration (DFA), Local Government Division; and by and through the execution of that certain Real Property Donation Agreement by the Village of Angel Fire and the State of New Mexico which is attached as Attachment I hereto, together with a legal description for the specific 10 acre real property being donated which is attached as Exhibit A thereto;

NOW, THEREFORE, BE IT RESOLVED the Governing Body (Village Council) of the Village of Angel Fire hereby authorizes the donation of the 10 acre tract of real property from the Village of Angel Fire to the State of New Mexico for the purpose of a Veterans' Cemetery to be located adjacent to the Vietnam Veterans' Memorial State Park, which real property is fully described in Exhibit A to the "Real Property Donation Agreement" Attachment I hereto; and,

BE IT FURTHER RESOLVED that the Mayor for the Village of Angel Fire is authorized to execute, and her prior execution thereon is hereby ratified, the Real Property Donation Agreement attached as Attachment I hereto.

PASSED, APPROVED, AND ADOPTED this 12th day of January, 2016.

_____
Barbara Cottam, Mayor

Attest:

_____
Terry Cordova, Village Clerk

REAL PROPERTY DONATION AGREEMENT

This Agreement for the-donation of real property (Agreement) is entered into by and between the Village of Angel Fire, New Mexico (hereinafter "Village") and the State of New Mexico, General Services Department, Facilities Management Division (hereinafter "FMD").

WHEREAS, the Village is the owner of the real property (hereinafter "Property") located near Angel Fire, Colfax County, New Mexico and further described as:

A 10 acre, more or less, tract of land in Sections 29, 30, 31, and 32, T 26 N., R 16 E., NMPM and further described in Exhibit A attached hereto; and

WHEREAS, the Village desires to donate the property to the State of New Mexico; and

WHEREAS, the Village's Mayor Barbara Cottam has been authorized to execute this Agreement on behalf of the Village;

NOW, THEREFORE, the parties agree as follows:

1. The Village declares that it is the sole owner of the property and that it has clear title to the property, free and clear of any debts or other encumbrances and to the best of its knowledge there are no liens or other encumbrances on the property.

2. The Village waives any right to receive any compensation in return for its transfer of ownership of the property to the State of New Mexico.

3. This Agreement shall be binding upon the Village and upon its respective successors or assigns. This Agreement shall also be binding upon FMD and upon its successors or assigns.

4. This Agreement embodies the entire agreement between the Village and FMD.

5. The mutual promises contained in this Agreement constitute full and adequate consideration for the Agreement.

6. This Agreement shall be governed by the laws of the State of New Mexico.

7. The FMD shall be responsible for all surveys, inspections, and preparation of documents, and all costs thereof, relating to the transfer of ownership of the property to FMD, including the preparation of any necessary plats or diagrams. The FMD shall be responsible for the filing with the County Clerk of all documents relating to the transfer

ATTACHMENT I
to Resolution 2016 - _____

of ownership, and shall be responsible for all fees charged by the County Clerk for such filings.

8. By signing this Agreement the Village agrees to transfers title and ownership of the property by Quitclaim Deed to the State of New Mexico at a mutually agreeable date for closing and by signing this Agreement, the General Services Department, Facilities Management Division, accepts title and ownership of the property (Exhibit A hereto) for a new Veterans Cemetery on behalf of the State of New Mexico on the date of closing.

9. The Property is described by Exhibit A attached hereto.

10. The FMD agrees it is receiving the property in an 'as is' condition with no warranty and at no cost to the Village of Angel Fire, New Mexico.

IN WITNESS WHEREOF, the parties to this Agreement, by and through their authorized representatives, set their hands and seals on the date or dates indicated .

THE VILLAGE OF ANGEL FIRE, NEW MEXICO

By: Barbara L Cottam Date: 12-24-15

Barbara Cottam
Its Mayor

ATTEST:

Terry Cordova
Village Clerk

STATE OF NEW MEXICO, GENERAL SERVICES DEPARTMENT

By:_____ Date:_____

ATTEST:

_____

Notary Public,_____

EXHIBIT "A"

TRACT "C-1"

All that certain tract of land lying and being situate within Section 36, Township 26 North, Range 15 East, N.M.P.M., within the Maxwell Land Grant, Colfax County, New Mexico and being more particularly described as follows:

Commencing at the Section Corner common to Sections 29, 30, 31 and 32, T26N, R16E, N.M.P.M.:

Thence S 88°06'30"W, a distance of 1245.48 feet to a point on the northwesterly right-of-way of U.S. Highway No. 64; thence in a general southwesterly direction along said right-of-way the following courses and distances: on a curve to the right having a central angle of 01°44'25", a radius of 5629.58 feet, an arc length of 170.99 feet and whose chord bears S40°01'48"W, a distance of 170.98 feet to a point; thence S40°54'00"W, a distance of 5095.58 feet to the point of intersection of said right-of-way with the southerly right-of-way of Onate Road, also known as Colfax County Road No. B4; thence in a general westerly direction along the said right-of-way of Onate Road the following courses and distances: S73°14'50"W, a distance of 84.46 feet to a point; thence on a curve to the right having a central angle of 21°40'15", a radius of 447.98 feet, an arc length of 169.44 feet and whose chord bears S84°04'58"W, a distance of 168.43 feet to a point; thence N85°04'55"W, a distance of 496.72 feet to a point; thence on a curve to the right having a central angle of 03°49'55", a radius of 3019.53 feet, an arc length of 201.95 feet and whose chord bears N83°09'58"W, a distance of 201.91 feet to a point; thence N81°15'00"W, a distance of 280.74 feet to the most easterly corner and point of beginning of the herein described Tract C-1:

Thence running from said point of beginning, leaving said right-of-way, S32°18'54"W, a distance of 917.73 feet to a point; thence N57°41'06"W, a distance of 500.00 feet to a point; thence N32°18'54"E, a distance of 906.02 feet to a point on the aforesaid southerly right-of-way of Onate Road; thence in a general easterly direction along said right-of-way the following courses and distances: S40°03'40"E, a distance of 125.97 feet to a point; thence on a curve to the left having a central angle of 41°11'20 a radius of 429.19 feet, an arc length of 308.54 feet and whose chord bears S60°39'20"E, a distance of 301.94 feet to a point; thence S81°15'00"E, a distance of 85.55 feet to the point of beginning, containing 10 acres of land, more or less.

The above described Parcel C-1 lies within Parcel C, described in that certain warranty deed to Saladon Properties, LLC, recorded in the Office of the Colfax County Clerk in Real Estate Records Book 13, page 12577.

COUNCIL AGENDA ITEM

STAFF RECOMMENDATION

MEETING DATE: January 12, 2016

TO: Mayor / Council and Village Administrator

FROM: Andrew Bertges, Fire Chief

SUBJECT: Approval to Reinstate the cut position in of Fire Fighter/Emergency Medical Technician (FF/EMT) for FF/EMT/Emergency Manager

Background/Facts

Based on recent events (power outage) and increased call volume, the fire department would like to reinstate the recently cut position to include Emergency Management. For a total cost of $22,703 (including the 25% grant from the Department of Homeland Security) to the Fire department general fund. With The state fire protection fund allowing us to pay the new Chevy truck ($17,000) and the Fire excise tax reimbursement ($10,000) we should have the available funds.

Alternatives:

N/A

1) **Financial Impact and Review**:

Financial Impact:_ ____None to the Village general fund_____

Budgeted Item: yes _ no:X Funding Source: _101-26 Fire Department general fund__

Finance Department Comments and Review: Money from 208, 209 + 101-26 will cover the added expense.

1/6/15

Finance Directors Signature

2) **Attached Documents:**

Letter from the State Fire Protection concerning the Chevy Truck

3) **Staff's Recommended Motion**: Motion and Second to approve contract

4)

5) **Village Administrator Recommendation:**

Approval: ✓ **Disapproval:** _____ **other:** _____

Signature: _____

Rick Tafoya, Village Manager

NEW MEXICO PUBLIC REGULATION COMMISSION

COMMISSIONERS

DISTRICT 1 KAREN L. MONTOYA, CHAIR
DISTRICT 2 PATRICK H. LYONS
DISTRICT 3 VALERIE ESPINOZA
DISTRICT 4 LYNDA LOVEJOY, VICE CHAIR
DISTRICT 5 SANDY JONES

INTERIM ACTING CHIEF OF STAFF
Andrea Delling

STATE FIRE MARSHAL DIVISION
John Standefer, State Fire Marshal

1120 Paseo de Peralta, Room 413
P.O. Box 1269
Santa Fe, NM 87504-1269

800-244-6702 (In state only)
(505) 476-0066
Fax: (505) 476-0100

December 1, 2015

Village of Angel Fire Fire Department
Attn: Andrew Bertges, Fire Chief
P.O. Box 610
Angel Fire, New Mexico 87710

RE: Request to Purchase Command/Utility Vehicle

Chief Bertges:

This correspondence is in response to your letter dated November 19, 2015 in which you have requested approval to purchase a Command/Utility Vehicle. The Command/Utility Vehicle as described is a 2500 HD Crew Cab.

As stated in your request, the approval of the purchase of the above mentioned vehicle is based on the specs and information you have provided. The State Fire Marshal's Division will authorize the purchase of this unit for the purposes of supporting the Fire Departments Command and response needs.

For future references, please be reminded that all purchases shall be accomplished in accordance with the policies and guidelines of your governing body, the provisions of the Public Purchase Act, and as approved by the New Mexico Department of Finance and Administration.

If you have any questions, please do not hesitate to contact me at 505-476-0165.

Sincerely,

Vernon Muller
Deputy Fire Marshal

xc: File

1/05/2016 9:06 AM

PAYROLL NO#: 01 - Village Of Angel Fire

PAYROLL HISTORY REPORT

SORTED BY EMPLOYEE NO#

DATE: 7/01/2015 THRU 12/31/2015

EMPLOYEE: [redacted] NAME: [redacted]

	1ST - QUARTER TOTALS		2ND - QUARTER TOTALS		3RD - QUARTER TOTALS		4TH - QUARTER TOTALS		** TOTAL **	
NBR CHECKS	0 CHECK(S)		0 CHECK(S)		7 CHECK(S)		8 CHECK(S)		15 CHECK(S)	
NET -		0.00		0.00		7847.84		7704.26		15552.10
EARNINGS	HOURS	AMOUNT	HOURS	AMOUNT	HOURS	AMOUNT	HOURS	AMOUNT	HOURS	AMOUNT
GROSS -		0.00		0.00		12075.34		11915.70		23991.04
REGULAR PAY-	0.00	0.00	0.00	0.00	550.00	8156.50	534.00	7919.22	1084.00	16075.72
OVERTIME PA-	0.00	0.00	0.00	0.00	93.50	2079.92	52.00	1156.74	145.50	3236.66
HOLIDAY PAY-	0.00	0.00	0.00	0.00	8.00	118.64	36.00	533.88	44.00	652.52
ON CALL -	0.00	0.00	0.00	0.00	106.00	1571.98	112.00	1660.96	218.00	3232.94
PTO -	0.00	0.00	0.00	0.00	10.00	148.30	22.00	326.26	32.00	474.56
LUMP-TAXABL-	0.00	0.00	0.00	0.00	0.00	0.00	0.00	200.00	0.00	200.00
COMP TAKEN -	0.00	0.00	0.00	0.00	0.00	0.00	8.00	118.64	8.00	118.64
COMP EARNED-	0.00	0.00	0.00	0.00	8.00	0.00	0.00	0.00	8.00	0.00
DEDUCTIONS	EMPLOYER	DEDUCT	EMPLOYER	DEDUCT	EMPLOYER	DEDUCT	EMPLOYER	DEDUCT	EMPLOYER	DEDUCT
ADM FEE DEP-	0.00	0.00	0.00	0.00	3.12	0.78	3.12	0.78	6.24	1.56
DENTL COUPL-	0.00	0.00	0.00	0.00	139.20	34.80	139.20	34.80	278.40	69.60
DEP LIFE -	0.00	0.00	0.00	0.00	5.64	1.44	5.64	1.44	11.28	2.88
DISABILITY -	0.00	0.00	0.00	0.00	0.00	28.20	0.00	28.20	0.00	56.40
PERA-FIRE -	0.00	0.00	0.00	0.00	1823.70	1490.93	1926.43	1574.93	3750.13	3065.86
LIFE W/DEP -	0.00	0.00	0.00	0.00	12.60	0.00	12.60	0.00	25.20	0.00
MED COUPLE -	0.00	0.00	0.00	0.00	2604.54	651.12	2604.57	651.12	5209.11	1302.24
UNEMP. INSU-	0.00	0.00	0.00	0.00	600.49	0.00	0.00	0.00	600.49	0.00
VISION COUP-	0.00	0.00	0.00	0.00	24.36	6.06	24.36	6.06	48.72	12.12
WC INSURANC-	0.00	0.00	0.00	0.00	504.00	0.00	504.00	0.00	1008.00	0.00
WORKS COMP -	0.00	0.00	0.00	0.00	2.30	2.00	2.30	2.00	4.60	4.00
TAXES*	TAXABLE	TAX	TAXABLE	TAX	TAXABLE	TAX	TAXABLE	TAX	TAXABLE	TAX
FEDERAL W/H-	0.00	0.00	0.00	0.00	9862.01	883.63	9618.37	817.08	19480.38	1700.71
STATE W/H -	0.00	0.00	0.00	0.00	9862.01	260.04	9618.37	238.73	19480.38	498.77
FICA -	0.00	0.00	0.00	0.00	11352.94	703.88	11193.30	693.99	22546.24	1397.87
MEDICARE -	0.00	0.00	0.00	0.00	11352.94	164.62	11193.30	162.31	22546.24	326.93
FIC CREDIT -		0.00		0.00		0.00		0.00		0.00

9•20 +
15•96 +
1,305•74 +
5,727•94 +
8,580•71 +
4•64 +
81•20 +
10•40 +
0•42 +
18•80 +
81•20 +
10•40 +
0•42 +
18•80 +
2,123•31 +
496•60 +
18,485•74 *

$2054 / month
4000 / month
6054 / mont

x5 month = $30,270
-25% DHS 7567.50

Cost $22702.50

101-GENERAL FUND
FIRE DEPARTMENT

% OF YEAR COMPLETED: 58.33

DEPARTMENTAL EXPENDITURES	CURRENT BUDGET	CURRENT PERIOD	YEAR TO DATE ACTUAL	TOTAL ENCUMBERED	BUDGET BALANCE	% YTD BUDGET
WAGES AND BENEFITS						
101-26-41000 FULL-TIME EMPLOYEES	198,658	0.00	76,097.53	0.00	122,560.47	38.31
101-26-41002 TEMPORARY EMPLOYEES	15,423	0.00	20,005.17	0.00	(4,582.17)	129.71
101-26-41003 TERMINAL LEAVE PAY	0	0.00	2,004.87	0.00	(2,004.87)	0.00
101-26-41005 STANDBY DUTY PAY	20,999	0.00	10,537.56	0.00	10,461.44	50.18
101-26-41050 OVERTIME	6,682	0.00	11,730.94	0.00	(5,048.94)	175.56
101-26-42000 FICA & MEDICARE TAXES	16,377	0.00	9,575.05	0.00	6,801.95	58.47
101-26-42030 PERA	38,034	0.00	17,859.05	0.00	20,174.95	46.96
101-26-42050 HEALTH CARE BENEFITS	53,220	0.00	18,090.52	0.00	35,129.48	33.99
101-26-42080 WORKERS' COMP ADMIN FEE	55	0.00	29.90	0.00	25.10	54.36
101-26-42081 WORKERS COMP INSURANCE	40,642	0.00	6,315.78	0.00	34,326.22	15.54
101-26-42085 UNEMPLOYMENT INSURANCE	8,362	0.00	3,982.82	0.00	4,379.18	47.63
TOTAL WAGES AND BENEFITS	398,452	0.00	176,229.19	0.00	222,222.81	44.23
TRAVEL						
PURCHASED PROPERTY SVCS						
CONTRACTUAL SERVICES						
101-26-45030 PROFESSIONAL SERVICES	25,500	0.00	2,187.13	2,512.13	20,800.74	18.43
101-26-45900 OTHER CONTRACTUAL SERVICES	26,000	0.00	13,408.45	0.00	12,591.55	51.57
TOTAL CONTRACTUAL SERVICES	51,500	0.00	15,595.58	2,512.13	33,392.29	35.16
SUPPLIES						
101-26-46015 SUPPLIES - FIELD	3,600	0.00	0.00	0.00	3,600.00	0.00
TOTAL SUPPLIES	3,600	0.00	0.00	0.00	3,600.00	0.00
OTHER OPERATING COSTS						
101-26-47050 CREDIT CARD FEES	0	0.00	0.02	0.00	(0.02)	0.00
101-26-47130 RENT-LAND AND BUILDING	46,000	0.00	24,033.45	14,666.75	7,299.80	84.13
101-26-47150 TELEPHONE	0	0.00	37.11	0.00	(37.11)	0.00
101-26-47160 UTILITIES	15,000	0.00	4,486.68	0.00	10,513.32	29.91
101-26-47175 BULK FUEL & OIL	12,000	0.00	4,818.23	0.00	7,181.77	40.15
TOTAL OTHER OPERATING COSTS	73,000	0.00	33,375.49	14,666.75	24,957.76	65.81
CAPITAL PURCHASES						
101-26-48055 EQUIPMENT	17,000	0.00	17,000.00	0.00	0.00	100.00
TOTAL CAPITAL PURCHASES	17,000	0.00	17,000.00	0.00	0.00	100.00
TOTAL FIRE DEPARTMENT	543,552	0.00	242,200.26	17,178.88	284,172.86	47.72

Employee Management - (View)

File Edit Options Help

Employee Number 01[redacted] Next Employee # Name [redacted]

General | Deductions | Leave | Rates | Base | Information | Comments YTD | History | Rate Log

March - Dec

Earnings

Code	Description	Hours	Amount
1	REGULAR PAY	1,694.00	25,173.72
2	OVERTIME PAY	214.00	4,760.46
4	HOLIDAY PAY	60.00	889.80
11	ON CALL HOURS	338.00	5,012.54
PTO	PTO-PERSONAL TIME OFF	32.00	474.56
LMPT	LUMP SUM-TAXABLE	0.00	200.00
CT	COMP TAKEN	8.00	118.64
CE	COMP EARNED	8.00	0.00

Deductions

Code	Taxable	Employee	Employer
WC		8.00	9.20
WCI		0.00	1,596.00
UNE		0.00	1,305.74
FPR		4,682.79	5,727.94
MPC		2,145.12	8,580.71
DPC		116.00	464.00
VPC		20.20	81.20
ADF		2.60	10.40
LFP		0.00	42.00
DLP		4.80	18.80

Options

Earnings Group: Pay Type

Scope: Year to Date

From 0/00/0000 To 99/99/9999

Recap

	Gross	Deductions	Taxes	Net Pay
Employee	36,629.72	7,073.51	5,884.97	23,671.24
Employer Contribution		17,835.99	2,619.91	

Edit This Record Copy From Additional Info Clear

View wbell

Employee Management - (View)

File Edit Options Help

Employee Number 01[redacted] Next Employee #

Name [redacted]

General | Deductions | Leave | Rates | Base | Information | Comments | YTD | History | Rate Log

Earnings

Code	Description	Hours	Amount
1	REGULAR PAY	1,694.0	25,173.72
2	OVERTIME PAY	214.0	4,760.46
4	HOLIDAY PAY	60.0	889.80
11	ON CALL HOURS	338.0	5,012.54
PTO	PTO-PERSONAL TIME OFF	32.0	474.56
LMPT	LUMP SUM- TAXABLE	0.0	200.00
CT	COMP TAKEN	8.0	118.64
CE	COMP EARNED	8.0	0.00

Deductions

Month - Dec

Code	Taxable	Employee	Employer
VPC		20.20	81.20
ADF		2.60	10.40
LFP		0.00	42.00
DLP		4.80	18.80
DSP		94.00	0.00
Federal	29,564.21	2,527.84	0.00
State	29,564.21	737.22	0.00
FICA	34,247.00	2,123.31	2,123.31
Medicare	34,247.00	496.60	496.60
EIC Credit	0.00	0.00	0.00

Options

Earnings Group: Pay Type

Scope: Year to Date

From 0/00/0000 To 99/99/9999

Recap

	Gross	Deductions	Taxes	Net Pay
Employee	36,629.72	7,073.51	5,884.97	23,671.24
Employer Contribution		17,835.99	2,619.91	

Edit This Record | Copy From | Additional Info | Clear

View | wbell

01-GENERAL FUND
IRE DEPARTMENT

% OF YEAR COMPLETED: 33.33

EPARTMENTAL EXPENDITURES	CURRENT BUDGET	CURRENT PERIOD	YEAR TO DATE ACTUAL	TOTAL ENCUMBERED	BUDGET BALANCE	% YTD BUDGET
AGES AND BENEFITS						
01-26-41000 FULL-TIME EMPLOYEES	198,658	0.00	34,810.67	0.00	163,847.33	17.52
01-26-41002 TEMPORARY EMPLOYEES	15,423	0.00	10,536.60	0.00	4,886.40	68.32
01-26-41003 TERMINAL LEAVE PAY	0	0.00	2,004.87	0.00	(2,004.87)	0.00
01-26-41005 STANDBY DUTY PAY	20,999	0.00	5,005.46	0.00	15,993.54	23.84
01-26-41050 OVERTIME	6,682	0.00	6,479.04	0.00	202.96	96.96
01-26-42000 FICA & MEDICARE TAXES	16,377	0.00	5,065.39	0.00	11,311.61	30.93
01-26-42030 PERA	38,034	0.00	8,229.71	0.00	29,804.29	21.64
01-26-42050 HEALTH CARE BENEFITS	53,220	0.00	9,562.93	0.00	43,657.07	17.97
01-26-42080 WORKERS' COMP ADMIN FEE	55	0.00	18.40	0.00	36.60	33.45
01-26-42081 WORKERS COMP INSURANCE	40,642	0.00	3,184.78	0.00	37,457.22	7.84
01-26-42085 UNEMPLOYMENT INSURANCE	8,362	0.00	2,647.91	0.00	5,714.09	31.67
TOTAL WAGES AND BENEFITS	398,452	0.00	87,545.76	0.00	310,906.24	21.97
RAVEL						
URCHASED PROPERTY SVCS						
ONTRACTUAL SERVICES						
01-26-45030 PROFESSIONAL SERVICES	25,500	0.00	855.90	344.10	24,300.00	4.71
01-26-45900 OTHER CONTRACTUAL SERVICES	26,000	0.00	6,250.00	7,900.00	11,850.00	54.42
TOTAL CONTRACTUAL SERVICES	51,500	0.00	7,105.90	8,244.10	36,150.00	29.81
UPPLIES						
01-26-46015 SUPPLIES - FIELD	3,600	0.00	0.00	0.00	3,600.00	0.00
TOTAL SUPPLIES	3,600	0.00	0.00	0.00	3,600.00	0.00
THER OPERATING COSTS						
01-26-47050 CREDIT CARD FEES	0	0.00	0.02	0.00	(0.02)	0.00
01-26-47130 RENT-LAND AND BUILDING	46,000	0.00	13,483.40	7,616.70	24,899.90	45.87
01-26-47160 UTILITIES	15,000	550.81	2,043.27	0.00	12,956.73	13.62
01-26-47175 BULK FUEL & OIL	12,000	0.00	1,789.34	0.00	10,210.66	14.91
TOTAL OTHER OPERATING COSTS	73,000	550.81	17,316.03	7,616.70	48,067.27	34.15
APITAL PURCHASES						
01-26-48055 EQUIPMENT	17,000	0.00	0.00	17,000.00	0.00	100.00
TOTAL CAPITAL PURCHASES	17,000	0.00	0.00	17,000.00	0.00	100.00
TOTAL FIRE DEPARTMENT	543,552	550.81	111,967.69	32,860.80	398,723.51	26.64

COUNCIL AGENDA ITEM

STAFF RECOMMENDATION

MEETING DATE: January 12, 2016

TO: Mayor / Council and Village Administrator

FROM: Andrew Bertges, Fire Chief

SUBJECT: Approval of grant application for a equipped new 4x4 Structure Engine. Estimated value of $600,000

Background/Facts

The Fire Department has an opportunity to apply for a grant through the Federal Assistance to Fire Fighters Grant program. With Fire station 3 delayed and increasing problems with fire apparatus. We have an opportunity to add a new engine to our fleet.

Alternatives:

N/A

1) **Financial Impact and Review**:

Financial Impact:_ ____None to the Village general fund_____

Budgeted Item: yes _X no: Funding Source: ___Fire protection fund__

Finance Department Comments and Review: Match will be in FY17 budget.

1/6/16

Finance Directors Signature

2) **Attached Documents:**

Grant application

---

3) **Staff's Recommended Motion**: Motion and Second to approve contract

~~4)~~

---

5) **Village Administrator Recommendation:**

Approval: _____ **Disapproval:** _____ **other:** _____

Signature: _____

Rick Taroya, Village Manager

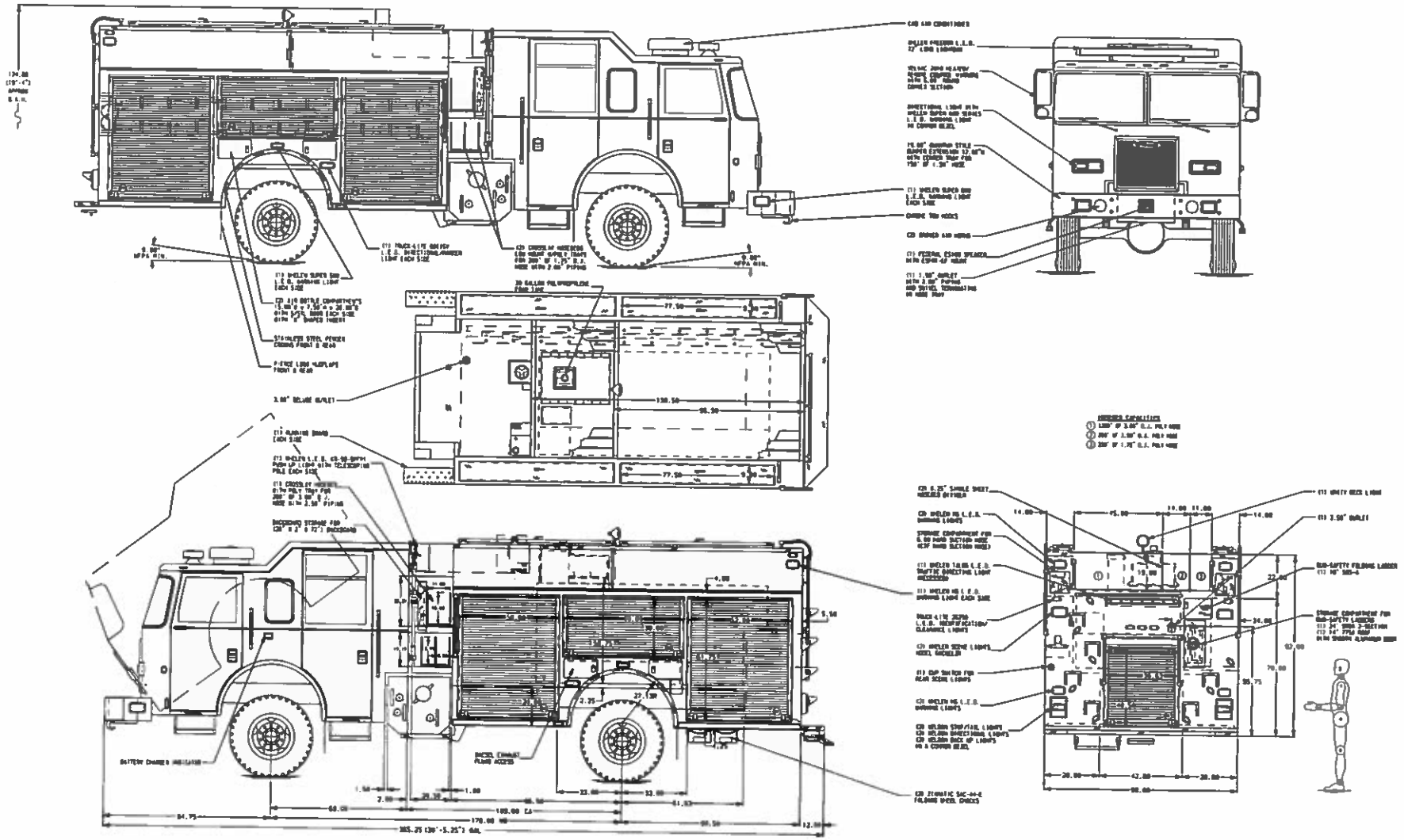

ALUMINUM BODY

NOTE

DIMENSIONS SHOWN ARE APPROXIMATE AND ARE SUBJECT TO MINOR DEVIATIONS AS MAY OCCUR OR BE NECESSARY IN CONSTRUCTION.
MINOR DETAILS NOT SHOWN.

1. CUSTOMER PUMP PLUS 1200 BATTERY CHARGER LOCATED IN COMPARTMENT S2
2. MOUNTING BASES FOR ANTENNAS LOCATED PER SHOP ORDER
3. ONE PAINTED FLOOR MOUNTED SLIDE-OUT TRAY IN COMPARTMENTS S1 AND P1
4. VERTICAL EQUIPMENT MOUNTING TRACKS IN COMPARTMENT S2
5. ONE ADJUSTABLE PULL OVERHAUL DEPTH SHELF IN COMPARTMENT S1, S2, P1, P2 & S1
6. PERIMETER SCENE LIGHTS LOCATED PER SHOP ORDER
7. ONE 15A, 120V 4-PLACE DUPLEX RECEPTACLE LOCATED IN S1, P3 AND CAB

View File Created 14-MAR-2012 10:33:55

CUSTOMER APPROVAL								
APPROVED BY:					Pierce MANUFACTURING INC.		JOB NO.	25395
DATE:							SCALE 1:24	DATE
				CHASSIS DATA	TITLE	1500-D-1000 1000 GAL WATER W/30 GAL FOAM, 177"PUC FULL HGHT STANDARD DPTH COMPTS,LOORS ON PS	DRAWN BY SBU	12DEC11
				MAKE PIERCE	FOR	SANTA FE COUNTY EDGEWOOD SANTA FE, NM	CHECKED BY THI	14DEC11
REV	DATE	BY	CK	MODEL SABER	DWG NO.	25395AD	SHEET SIZE D	SHEET NO. 1 of 1

Proposal Option List

12/10/2015

Customer:	Santa Fe County - Stanley	**Bid Number:**	201
Representative	Jaramillo, Jose	**Job Number:**	25395
Organization:	Siddons-Martin Emergency Group	**Number of Units:**	1
Requirements Manager:	Bons, Jerry	**Bid Date:**	06-15-2011
Description:	Saber 4x4 PUC Edgewood	**Stock Number:**	
Body:	Pumper, PUC, Aluminum	**Price Level:**	1 (Current: 34)
Chassis:	Saber Chassis, PUC, 4x4		

Line	Option	Type	Option Description	Qty	Price
1	0584456		Manufacture Location: Appleton, Wisconsin	1	0.00
2	0584452		RFP Location: Appleton, Wisconsin	1	0.00
3	0588609		Vehicle Destination, US	1	0.00
4	0581836		Boiler Plates, PUC Pumper, USE OPTION 659545	1	0.00
5	0018007		Single Source Compliance, USE OPTION 661794	1	0.00
6	0698290		Unit to be Similar in some Aspects	1	0.00
			Fill in Blank - 23942 and 23943		
7	0533316		Comply NFPA 1901 Changes Effective Jan 1, 2009, With Exceptions	1	176.46
8	0533347		Pumper/Pumper with Aerial Device Fire Apparatus	1	0.00
9	0588611		Vehicle Certification, Pumper	1	0.00
10	0681282		Agency, Apparatus Certification, Pumper/Tanker, U.L. USE OPTION 661778	1	0.00
11	0008021		Combination Department	1	0.00
12	0007289		Delivery	1	0.00
			Location - Santa Fe County, NM		
			Fill in Blank - 210 calendar days not		
13	9999999	SCC	Inspection - final inspection Appleton, 4 personnel - Edgewood	1	7,200.00
			Qty, - 1		
			Fill in Blank - four fire department personel		
14	0537375		Unit of Measure, US Gallons	1	0.00
15	0529326		Bid Bond, 10%, Pierce Built Chassis	1	0.00
16	0540326		Performance Bond, Not Requested	1	0.00
17	0000007		Approval Drawing	1	0.00
18	0002928		Electrical Diagrams	1	0.00
19	0680881		Saber Chassis, PUC, 4x4	1	1,719.48
20	0000110		Wheelbase	1	0.00
			Wheelbase - 178.00"		
21	0000070		GVW Rating	1	0.00
			GVW rating - 45,000		
22	0000201		Frame Rails, 10.13" x 3.06" x .31", Saber	1	351.72
23	0020018		Frame Liner Not Req'd	1	0.00
24	0534255		Axle, Front, Meritor MX-19-140, 18,000 lb, (FWD) Saber, PUC	1	27,591.22
25	0538878		Suspension, Front, Spring, 18,000 lb MX-19-140	1	1,712.48
26	0000321		Shock Absorbers on Front Axle, Saber/Enforcer	1	0.00
27	0000322		Oil Seals, Front Axle	1	0.00
28	0588522		Tires, Front, Goodyear, G287 MSA, 315/80R22.50, 20 ply	1	1,857.85
29	0019575		Wheels, Front, Alcoa, 22.50" x 9.00", Aluminum, Hub Pilot	1	1,932.82
30	0543666		Axle, Rear, Eaton 260S4, 4WD, 27,000 lbs, Saber, PUC	1	21,316.56
31	0544250		Top Speed of Vehicle, 65 MPH	1	0.00
32	0000577		Suspen, Rear, Double Slipper Spring, 31,000 lb, Saber	1	2,163.00
33	0000485		Oil Seals, Rear Axle	1	0.00
34	0011855		Differential Lock, (CTD) Eaton, Sngl Axle (4x4)	1	1,523.05
35	0588537		Tires, Rear, Goodyear, G287 MSA, 315/80R22.50, 20 ply, Single	1	4,105.14
36	0019668		Wheels, Rear, Alcoa, 22.50" x 9.00", Aluminum, Hub Pilot, Single	1	3,423.57
37	0587024	SP	Tire Balancing, with "Equal", all, single axle	1	401.73
38	0545391		Tire Pressure Monitoring Valve Cap	1	99.72
			Qty, Tire Pressure Ind - 6		
39	0003245		Axle Hub Covers w/center hole, S/S, Front Axle	1	91.13
40	0001960		Axle Hub Covers, Rear, S/S, High Hat (Pair)	1	191.96
41	0057936		Covers, Lug Nut, Chrome	1	105.37
42	0002045		Mud Flaps, w/logo front & rear	1	511.11

Line	Option	Type	Option Description	Qty	Price
43	0544802		Chocks, Wheel, SAC-44-E, Folding	1	479.69
			Qty, Pair - 01		
44	0544806		Mounting Brackets, Chocks, SAC-44-E, Folding, Horizontal	1	335.13
			EXCLUDED: [Location, Wheel chock]. - Selected value: "below D1 as drawn"		
			Qty, Pair - 01		
			Location, Wheel Chocks -		
45	0530893	SP	ABS/ATC Wabco Brake System, Single Rear Axle, AXT/VEL/IMP/SAB (FWD)	1	5,600.20
46	0000710		Brakes, Cam, Front, 16.50 x 6.00 (Std FL/RF axle)	1	0.00
47	0009541		Brakes, Eaton, Cam, Rear, 16.50 x 7.00"	1	0.00
48	0020784		Air Compressor, Brake, Cummins/Wabco 18.7 CFM	1	0.00
49	0000785		Brake Reservoirs, Three	1	0.00
50	0568012		Air Dryer, Wabco System Saver 1200, Heater, 2010	1	40.07
51	0000790		Brake Lines, Nylon	1	0.00
52	0020851		Not Required, Air Inlet	1	0.00
53	0591581		Engine, Cummins ISL9, 400 hp, 1250 ft-lb, EPA 2010, W/REPTO,Saber	1	79,605.40
54	0001244		High Idle w/Electronic Engine, Custom	1	118.97
55	0687994		Engine Brake, Jacobs Compression Brake, Cummins Engine	1	5,200.71
			Switch, Engine Brake - e) ISC/ISM/ISL9/ISX Hi Med Lo		
56	0591563		Clutch, Fan, Air Actuated, Horton Drive Master, Saber	1	302.89
57	0053014		Air Intake, w/Ember separator, Saber	1	0.00
58	0597538		Exhaust System, 4", 2010 ISL9 Engine, Vertical, PUC	1	0.00
59	0557560		Radiator, Saber	1	0.00
60	0001090		Cooling Hoses, Rubber	1	0.00
61	0001125		Fuel Tank, 65 Gallon, Left Side Fill	1	0.00
62	0001129		Lines, Fuel	1	0.00
63	0595087		DEF Tank, 4.5 Gallon, DS Fill, Forward of Rear Axle	1	0.00
			Door, Material & Finish, DEF Tank -		
64	0552793		Not Required, Fuel Priming Pump	1	0.00
65	0552712		Not Required, Shutoff Valve, Fuel Line	1	0.00
66	0693913		Cooler, Chassis Fuel, Not Req'd.	1	0.00
67	0551791		Trans, Allison Gen IV 3000 EVS P With Prognostics	1	20,269.01
68	0001477		Transmission, Shifter, 4-Spd, Push Button	1	0.00
			Trans, ratio - 3000 EVS, 4Spd		
69	0517604		Transmission Programming, Park to Neutral, PUC	1	0.00
70	0001475		Transmission Oil Cooler, Internal	1	0.00
71	0001370		Driveline, Spicer 1710	1	2,232.44
72	0553777	SP	Driveline Reviewed & Approved	1	0.00
73	0691026		Steering, Ross TAS-85 w/tilt, TRW Pump, w/ Cooler	1	0.00
74	0001544		Not Required, Steering Assist Cylinder on Front Axle	1	0.00
75	0509229		Steering Wheel, 2 Spoke	1	0.00
76	0550144		Logo/Emblem, on Horn Button	1	0.00
			Text, Row (1) One - Edgewood		
			Text, Row (2) Two - Fire		
			Text, Row (3) Three - Dept.		
77	0580730	SP	Bumper, 19" Extended, 12" High Qtm Style, 4x4, Saber FR/Enforcer	1	2,818.37
78	0002270		Tow Hooks, Chrome	1	0.00
79	0012256		Tray, Hose center, 19" bumper w/outside Air Horns	1	314.30
			Grating, Bumper extension - Grating, Rubber		
			Capacity, Bumper Tray - 09) 150' of 1.50"		
80	0591013		Hose Restraint, Bumper Tray, 2.00" Straps,Velcro, Pair	1	109.52
			EXCLUDED: [Qty,]. - 01		
			Location 7 - center		
			Qty, Pair -		
81	0526694		Cab, Saber w/12" raised roof, PUC	1	41,760.52
82	0677478		Rear Wall, Exterior, Cab, Aluminum Treadplate	1	0.00
83	0002172		Cab Lift, Elec/Hyd, w/Manual Override, Saber	1	0.00
84	0546585		Cab Pump Enclosure, PUC	1	0.00
85	0584660		Grille, Bright Finished, Front of Cab, Saber	1	606.72
86	0087357		Molding, Chrome on Side of Cab	1	0.00
87	0002189		Mirrors, Velvac, 2010, West Coast Style, Heated/Remote	1	1,139.72

Line	Option	Type	Option Description	Qty	Price
88	0002205		Mirror, 6" Round Convex Below West Coast	1	121.90
89	0552874		Controls, Electric Roll-Up Windows, 4dr, 1 Driver Control, Qtm, Sab	1	693.46
90	0680935		Steps, 4-Door Cab, Saber	1	0.00
91	0553615		Steps, Stirrup w/Grip Strut, Cab & Crew Cab Doors, AXT, Saber/Enf 4x4	1	916.34
			Light, Step, Additional -		
92	0022733		Lights, Cab Inter, Officer and Driver Side, w/Weldon Dome Lights	1	122.35
93	0002141		Fenders, s/s on cab - Saber/Enforcer	1	668.26
94	0552722		Handrails, Exterior, Extended, Cab and Crew Cab, Saber PUC 4x4	1	210.14
95	0052102		Window, Side of C/C, Fixed, Sab/AXT	1	0.00
96	0012090		Not Required, Windows, Front/Side of raised roof	1	0.00
97	0012094		Windows, Delete Rear of Crew Cab	1	-245.27
98	0073965		Increased Leg Room, 3.00" Extra, Officer Position, Saber	1	63.02
99	0543916		Cab Interior, Vinyl, Upper Padded Door Panels, Saber	1	471.46
			Color, Cab Interior Vinyl/Fabric - a) Silver/Gray		
100	0012430		Cab Interior, paint color	1	0.00
			Color, Cab Interior Paint - a) gray		
101	0052100		Floor, Rubber Padded, Cab & Crew Cab, Saber/Enforcer	1	0.00
102	0002298		Heater/defroster, Saber cab	1	0.00
103	0532807		Heater, Crew cab , Recessed In Rear Wall, Saber Extended Cab	1	2,141.54
104	0559380		Air Conditioning, Saber, Extended Cab w/ Raised Roof	1	10,055.44
			Light, Overhead Compt - Amdor, White, Horizontal Mounted		
105	0092424		Grab Handles, Driver & Officer door post	1	171.05
106	0002526		Light, Engine Compt, All Custom Chassis	1	0.00
107	0693323	SP	Box, Open from Top, Custom Chassis, 4.00"H x 16.00"W x 22.25"L	1	301.07
			Location - on top of engine tunnel		
			Qty, - 1		
108	0000109		Seating Capacity, Cab	6	0.00
			Qty, - 06		
109	0536387		Seat, Driver, 911, Scissor Action, Air Ride, Mid-Height w/Headrest, Saber	1	631.55
110	0022349		Seat, Officer, 911, Fixed, SCBA, Saber	1	737.29
111	0002518		Radio Compt w/Non Air Ride Seat	1	0.00
			Radio Compt Size, Officer - a) Saber		
112	0199816		Seat, Rr Facing C/C, DS Outboard, Seats Inc 911, SCBA, Qtm/Sab/AXT/SLT	1	655.05
113	0102783		Not Required, Seat, Rr Facing C/C, Center	1	0.00
114	0199819		Seat, Rr Facing C/C, PS Outboard, Seats Inc 911, SCBA, Qtm/Sab/AXT/SLT	1	655.05
115	0199939		Cabinet, EMS, Forward Facing, DS, 17 W x 44.25 H x 17.38 D, Sab Ext Cab	1	1,328.61
			Door, EMS Cabinet - Gortite Roll Up Dr, Anod		
			Light, Short EMS Compt -		
			EXCLUDED: [Light, Tall EMS Compt]. - Amdor, Right Side		
116	0199910		Seat, Forward Facing C/C, Center, (2) Seats Inc 911, SCBA	1	1,310.09
117	0199940		Cabinet, EMS, Forward Facing, PS, 17 W x 44.25 H x 17.38 D, Sab Ext Cab	1	1,328.61
			Door, EMS Cabinet - Gortite Roll Up Dr, Anod		
			Light, Short EMS Compt -		
			EXCLUDED: [Light, Tall EMS Compt]. - Amdor, Left Side		
118	0042264		Shelf, Adjustable, EMS Compt, 1.25" Lip	4	499.36
			EXCLUDED: [Location]. - Selected value: "2 in each cabinet"		
			Qty, Shelf - 04		
			Location, Shelf, EMS -		
119	0089667		Upholstery, Seats In Cab, All Imperial 1200, All 911	1	0.00
			Color, Cab Interior Vinyl/Fabric - h) Gray/Black		
120	0065740		Bracket, Air Bottle Zico, ULLH, Load & Lock, 1901-04, In Cab Seats	5	0.00
			Qty, - 05		
121	0547293		Seat Belts, Red	1	0.00
122	0542388		Seat Belt Monitoring System	1	246.66
123	0543917		Helmet Storage, Provided by Fire Department, NFPA	1	0.00
124	0020583		Lights, Dome CC, (2) Weldon, 8081-0000-13, Incandescent, Red/Clear, Gry Bezel	1	0.00
125	0544420		Handlights, (4) Streamlight Fire Vulcan, 44401 12v, Orange	1	904.99
			Location, lights - 4 in the crew cab (2 each mounted on the base of each of the EMS cabinets in the crew cab. Match previous unit #23942		
126	0544504		Spotlight, Handheld Cab, Collins CL-12-M w/S/S Brkt	1	434.46
			Location, lights - mounted within reach of the officer.		
			Qty, spotlights - 1		

Line	Option	Type	Option Description	Qty	Price
127	0594549		Cab Instruments, Saber 2010	1	0.00
128	0002544		Air Restriction Indicator - Pierce Chassis	1	0.00
129	0543751		Light, Do Not Move Apparatus Alarm, Do Not Move Truck - Steady Alarm	1	55.17
130	0005925		Light, Open Door - Custom Std	1	0.00
131	0002620		Wiper Control, 2-Speed	1	0.00
132	0548013		Wiring, Spare, 20 A 12V DC 2nd Qty, - 03 12vdc power from - Battery direct Wire termination - Stud Location - D1 D2 D3 as high as possible	3	317.18
133	0548009		Wiring, Spare, 20 A 12V DC 1st Qty, - 03 12vdc power from - Battery direct Wire termination - Stud EXCLUDED: [Location]. - Selected value: "P1 P2 P3 as high as possible on the front of the compartments" Location, Spare Wiring -	3	317.18
134	0548004		Wiring, Spare, 15 A 12V DC 1st Qty, - 01 12vdc power from - Battery direct Wire termination - 15 amp power point plug EXCLUDED: [Location]. - Selected value: "on the instrument panel between switch panel #2 and #4" Location, Spare Wiring -	1	125.56
135	0044166		Swivel Mount, Heavy Duty, Fill in Blank Feature Location - 1 hanging from the ceiling for the electronic siren and 1 on the engine tunnel for the customer supplied radios Qty, - 02 Fill in Blank - *	2	319.25
136	0543930		Vehicle Data Recorder, Dual Module	1	875.42
137	0586736	SP	Interface, Setcom PIM-1, 2-Pos, LMR to Cab / Pump Panel Radio, Second Two-Way Model - Two ICOM IC-F5061 with rmk-3 separation heads, one with C130AB 30 Linear Amp	1	1,404.92
138	0559156		Install Customer Provided Two-Way Radio(s) Location - control heads on swivel on top of engine tunnel and radios under passenger seat, and amplifier behind the officer seat Qty, - 03	3	2,394.75
139	0505836		Antenna Mount, Custom Chassis, Maxrad BMATM, Location Feature Location - (1) on the center of the cab between the lightbar and the a/c and (1) centered on the raised roof portion of the cab. Please label wires under the passenger seat as "Front Antenna" & "Rear Antenna" Qty, - 02 Location, Antenna Cable - officer seat box	2	357.87
140	0018704		Electrical Power/Signal Protection & Control, Saber, NOT FOR FUTURE USE	1	0.00
141	0005899		Electrical System, Saber, NOT FOR FUTURE USE	1	0.00
142	0079166		Batteries, (4) Exide Grp 31, 950 CCA each, Threaded Stud	1	625.18
143	0008621		Battery System, Single Start, All Custom Chassis	1	745.65
144	0002698		Battery Compartment, Saber/Enforcer	1	0.00
145	0531338		Charger, Sngl Sys, Kussmaul, Pump Plus 1200, 52-21-1100	1	2,242.87
146	0012781		Location, Charger/Compr, Front left body compt	1	0.00
147	0530951		Location, Battery Charger Indicator, DS Behind Cab Door	1	80.77
148	0016856		Shoreline, 15A 120V, Kussmaul Auto Eject, 091-55-15-120, Super Qty, - Color, Kussmaul Cover - b) red Connection, Shoreline - battery charger EXCLUDED: [Qty, Shoreline]. - 1	1	434.95
149	0026800		Shoreline Location Location, Shoreline(s) - DS Step Well	1	80.64
150	0121714		Alternator, 340 amp, Niehoff C620	1	3,228.13
151	0052767		Load Manager, Class 1 TSM, Elec Eng w/Hi-Idle, Cust	1	1,573.81
152	0580634		Cab Lighting, LED, Sab, (4x4), Single Headlights	1	204.15
153	0088869		Lights, Clearance/Marker/ID, Rear, Truck-Lite 26250R LED 7Lts	1	0.00

Line	Option	Type	Option Description	Qty	Price
154	0002794		Front Directionals, Amber in common bezels	1	486.43
155	0031203		Lights, Tail, Weldon 3884-0100-0*, Tri-Lamp Cluster, Incandescent	1	0.00
156	0075907		Lights, Backup, Included in Weldon light cluster (triple or quad)	1	0.00
157	0589905		Alarm, Back-up Warning, PRECO 1040	1	0.00
158	0521285		Light, Directional/Marker, Intermediate Light, Truck-Lite Model 60115Y LED	1	126.32
159	0057865		Lights, Perimeter Cab, Truck-Lite 60 Incandescent	1	493.49
			Cab, Perimeter Scene - Cab, 4dr Custom		
160	0538271		Lights, Perimeter Body, Truck-Lite 6060C LED 4lts, PP/Rr Stp, Grommet Mnt	1	460.01
			Switch, Location, Perim - Parking brake		
161	0556337		Lights, Step, P25 LED at Rear Tailboard, 2lts Perm Lts	1	373.58
162	0511749		Light, Step, Additional, P25 LED	4	385.60
			Qty, Lights - 04		
			Location, lights - one light above each step on the rear bulkhead		
163	0549118		Lights, Rear Scene, Whelen 60C0ELZR Gradient LED 12, Rec Mt 1st	2	1,022.33
			Location, lights - one on each side high on the rear bulkhead		
			Qty, - 02		
			Switch, Lt Control 1 DC,1 - a) DS Switch Panel		
			Switch, Lt Control 2 DC,2 - c) DS Rear of Apparatus		
			Switch, Lt Control 3 DC,3 - d) No Control		
			Switch, Lt Control 4 DC,4 - d) No Control		
			Control, Scene Lts -		
			Location, Scene Lights -		
164	0594644		Light, Havis, Whelen, KR-SB-5PFP1, Side Mount, Bottom Raise, LED 1st	2	3,399.62
			Location, lights - one each side on rear of cab		
			Qty, - 02		
			Paint, Color - *		
			Fill in Blank - *		
			To Do Not Move Truck Lt - a)connected to		
			Switch, Lt Control 1 DC,1 - a) DS Switch Panel		
			Switch, Lt Control 2 DC,2 - f) Pump Operator's Panel		
			Switch, Lt Control 3 DC,3 - d) No Control		
			Switch, Lt Control 4 DC,4 - d) No Control		
			Color, FRC/Rom Lt Housing -		
			Control, Scene Lts -		
			Color, Lt Housing -		
			Material, Bracket -		
			Color, Lt Housing HiViz -		
			Location, 12/24 Volt Lights -		
			Scene Light Optics -		
			Location, Pole Lights -		
			Mount, FRC -		
165	0546064		Light, Deck, Unity AG, Frt HB, Other Scene Lts at Rear, PUC	1	166.58
166	0518282		Pumper, PUC, Aluminum	1	50,594.60
167	0554271		Body Skirt Height, 20"	1	0.00
168	0515537		Tank, Water, 1000 Gallon, Poly, T-Shaped, PUC	1	9,667.45
169	0003405		Overflow, 4" Water Tank, Poly	1	0.00
170	0028107		Not Required, Foam Cell Modification	1	0.00
171	0504725	SP	Drain, Tank - 2.50", Mounted to Sump Only	1	576.74
172	0044431		Sleeve through Tank - Up to 3" Plumbing	1	293.74
			Qty, Sleeve - 1		
			Tank Exterior Finish -		
			Door, Material & Finish, Storage -		
			Latch, Door, Storage -		
			Hinge, Location -		
			Material -		
			Hole Diameter, Pegboard/Toolboard -		
			Door Type -		
173	0553725		Restraint, Water Tank, Heavy Duty, Special Type Tank, 4x4, or Export	1	419.03
174	0003429		Not Required, Direct Tank Fill	1	0.00
175	0003424		(No Dump Valve required)	1	0.00
176	0048710		Jet Assist Not Req'd	1	0.00
177	0030007		(No Dump Chute Required)	1	0.00
178	0514778		Not Required, Switch, Tank Dump Master	1	0.00

Line	Option	Type	Option Description	Qty	Price
179	0597043		Body Height, PUC	1	0.00
			Body Height - 92.00"		
180	0199241		Hose Bed, Aluminum, Pumper, PUC	1	0.00
181	0003482		Hose Bed Capacity, Additional	1	0.00
			Capacity, Hosebed - 1200' of 3", 250' of 2.50 ", 250' of 1.75"		
182	0083488		Divider, Hose Bed, .25" Unpainted	2	1,233.72
			Qty, Hosebed Dividers - 2		
183	0693891	SP	Hose Restraint, Netting W/Buckles, Rear Only, (W/Vinyl Hosebed Cover)	1	348.86
184	0089471		Cutout, Handhold, in Hose Bed Divider	2	115.69
			Qty, - 02		
185	0565692	SP	Cover, Hosebed, Twist & Turn Front, Velcro Sides, Forward 1/3 of Hosebed	1	625.21
			Color, Vinyl Cover - a) red		
186	0525658		Running Boards, PUC	1	675.07
187	0683043		Tailboard, 12" Deep, Full Width, Angled Corners, PUC	1	688.82
188	0690029		Wall, Rear, Body Material, PUC, PUC Tanker, PRM	1	0.00
189	0003531		Tow Bar, Under Tailboard	1	251.15
190	0518286		Construction, Compt, Alum, Pumper, PUC	1	0.00
191	0518351		DS 177" Rollup, (1) 50" Fwd, (1) 52" Rr, Standard Depth, PUC	1	3,118.70
192	0518354		PS 177" Rollup, (1) 50" Fwd Full Height & Depth, (1) 52" Rr, Std Depth, PUC	1	3,118.70
193	0692733		Doors, Rollup, Gortite, Side Compartments	6	-810.00
			Qty, Door Accessory - 06		
			Color,Gortite,Roll-upDoor - Satin finish		
			Latch, Gortite, Roll-up - Non-locking Liftbar		
194	0557309		Rear - Rollup Dr/40.50" FF, w/Tailboard, PUC	1	507.97
195	0692743		Door, Gortite, Roll-up, Rear Compartment, PUC	1	-135.00
			Color,Gortite,Roll-upDoor - Satin finish		
			Latch, Gortite, Roll-up - Non-locking Liftbar		
196	0545074		Lights, Compt, Amdor, LED, Dual Light Strips, Each Side of Door	7	1,916.56
			Location - all compartments		
			Qty, - 07		
			Location, Compartment Lights -		
197	0579923	SP	177" Hatch, (2) Lift-up, 14" Wide, Both Sides, PUC	1	5,237.59
			Size, Hatch Compt, Height - 22.00"		
198	0687514		Lights, Hatch Compt, LED Strip Light, 177", Both Sides	1	812.59
199	0687145		Shelf Tracks, Recessed, PUC/3rd Generation	1	794.67
200	0687108		Shelves, Adjustable, 500 lb Capacity, Full Width/Depth, Painted, 3rd Gen	9	1,520.09
			Qty, Shelf - 09		
			Location, Shelf - two each D3,D1,P3,P1and one in rear all upper		
201	0554774		Tray, 500 lb Slide-out, 2" Sides, 3/16" Painted, Floor Mounted, 3G	3	2,127.46
			Location - D1, D3 and P1		
			Qty, Tray (slide-out) - 03		
			Finish -		
			Tray, Side Height, Left -		
			Tray, Side Height, Right -		
			Tray, Side Height, Front -		
			Tray, Side Height, Rear -		
			Tray, Low Side Height, Front -		
			Tray, Low Side Height, Left -		
			Tray, Low Side Height, Rear -		
			Tray, Low Side Height, Right -		
			Shelf, Side Height, Left Side -		
			Tray, Side Height, Right & Left -		
202	0544614		Toolboard, Swing-out, Alum, .188", Peg Board, 3G	1	1,438.81
			EXCLUDED: [Finish]. - Painted, Compt Interior		
			location - in compt D2.		
			Qty - 1		
			Location, Pivot - Front		
			Mounting, Toolboard - Adjustable Frt-back		
			Hole Diameter, Pegboard/Toolboard -		
			Finish, Pegboard/Toolboard -		
203	0516644		Mounting, Backboards, Above Crosslays, PUC	1	274.54
			Qty, - 01		
			Size - sized to fit area above the lower crosslays 20x2x72		

Line	Option	Type	Option Description	Qty	Price
204	0019987		Tracks, Equipment Mounting, Vertical, Ea.	5	315.83
			Location - Compt D2 & P2 mounted 4" up from the floor Compt D1, R1, and P1 one track mounted 12" up from the floor and one track mounted 12" down from the ceiling		
			Qty, - 05		
205	0063064		Rub Rail, Aluminum Extruded, Side of Body, 3rd Gen Body	1	0.00
206	0515441		Fender Crowns, Rear, S/S, W/Removable Fender Liner, Pumper, 3rd Gen	1	737.29
207	0540092		Hose, Hard Suction, Provided by Fire Department, Pumper NFPA Classification	2	0.00
			Qty, Hard Suction Hose - 2		
			Length, Hard Suction Hose -		
			EXCLUDED: [Brand, Model, Age of Tool]. - Selected value: "KOCHEK"		
			EXCLUDED: [Length, Hard Suction Hose]. - Selected value: "6" X 10' with quick handles"		
			Diameter, Hard Suction Hose - 6.00"		
			Type of Hose Ends, Coupling, HSH -		
208	0519792		Troughs, Hard Suction, In 14" Hatch Compartment, PUC	2	1,678.39
			Location, driver's/passenger's/center - driver & passenger		
			Door, Material & Finish, Storage - Aluminum Treaplate		
			Latch, Door, Storage - Lift and Turn Latch		
			Qty - 2		
209	0527021		Handrails Located @ Front Body	1	0.00
210	0025450		Handrails, Rear Bulkhead	1	0.00
211	0004146		Handrail, Rear, Below Hose Bed, Full Width	1	0.00
212	0004154		Handrail, Extra - 10" Long	4	798.98
			Location, Handrails - upper bulhead rear of truck one each side as drawn / one each side top of storge box rear edge near lid as hand hold while getting on top of truck.		
			Qty, Handrails - 04		
213	0693318	SP	Handrail, Extra at Rear of Truck, Curved, 48" Off The Tailboard	2	577.30
			Location, Handrails - one each side top of truck as drawn		
			Qty, Handrails - 02		
214	0518611		Compt, Air Bottle in Fender Panel, S/S, PUC	3	2,274.78
			Location, Bracket/comp. - 2 on each side. 1 in front of the rear wheels and 1 behind the rear wheels		
			Qty, Air Bottle Comp - 3		
215	0062640		Insert, Air Bottle Compt, "W" Shaped	3	430.43
			Qty, - 03		
216	0692930		Compt, Air Bottle w/DEF Tank, Single, Fwd in Fender Panel, S/S Door, PUC	1	504.17
			Door, Material & Finish, Storage -		
217	0665875	SP	Insert, Air Bottle Compt, "V" Shaped	1	147.78
			Qty, - 1		
			Fill in Blank - driver's side rear fender panel next to the DEF tank fill.		
218	0004225		Ladder, 24' Duo-Safety 900A 2-Section	1	823.95
219	0004230		Ladder, 14' Duo-Safety 775A Roof	1	402.43
220	0567263		Ladders Btwn Tank & S.Sht, Built Into Body, PS, Pumper Style,Smooth Alum Dr, PUC	1	2,676.53
			Latch, Door Ladder Storage - "D" Handle latch		
221	0014245		Ladder, Folding, 10' 585A, Duo-Safety, w/Mounting	1	449.43
			Location, Folding Ladder - a) Right Compt		
222	0533377		Pole, Pike 8', Pumper, Provided by Fire Department	1	0.00
			Pike Pole/Hook End, Fire Hooks Unlimited -		
			Pike Pole Shaft, Fire Hooks Unlimited -		
223	0533375		Pike Pole, 6', Pumper, Provided by Fire Department	1	0.00
			Pike Pole/Hook End, Fire Hooks Unlimited -		
			Pike Pole Shaft, Fire Hooks Unlimited -		
224	0521734		No Steps Required, Front Of Body, PUC	1	0.00
225	0054382		Steps, Wedge, Rear of Body	1	0.00
226	0667033	SP	Step Package, Body, w/4x4 Chassis, Saber PUC	1	0.00
227	0541046	SP	Step, Wedge - Extra, PUC	1	290.44
			Location, Additional Step - Passenger side rear bulkhead below the ladder compt.		
			Qty, Add. Wedge Step - 1		
			Fill in Blank - same width as the other steps on the rear.		
228	0515695		Pump, Pierce, 1500 Single Stage, PUC	1	26,471.98

Line	Option	Type	Option Description	Qty	Price
229	0515822		Mechanical Seals, Silicon Carbide	1	743.34
230	0091446		Pump Setup Charges N/A	1	0.00
231	0515705		Gearcase, Pierce Pump, REPTO-Clutch Drive	1	0.00
232	0521309		Pumping Mode, Pump and Roll/Stationary, Basic, PUC	1	0.00
233	0515829		Pump Shift, Sure-Shift	1	0.00
234	0515833		Transmission Lock-up, Not Req'd, Park to Neutral, Pump, PUC	1	0.00
235	0515835		Auxiliary Cooling System, PUC	1	0.00
236	0014486		Not Required, Transfer Valve, Stage Pump	1	0.00
237	0013050		Valve, Relief Intake, Akron, Set @ 125 PSI	1	2,262.58
238	0515838		Controller, Pressure, Pierce, PUC	1	2,807.49
239	0516742		Primer, Pierce, for PUC	1	742.85
240	0516694		Manuals, Pump (2), CD, Pierce PUC Pump	1	0.00
241	0519952		Plumbing, Stainless Steel & Hose, PUC	1	1,030.12
242	0064656		Not Required, Black Iron Pipe with Stainless Steel Plumbing	1	0.00
243	0517852		Inlets, 6.00" - 1500 GPM, Pierce PUC Pump	1	0.00
244	0004646		Cap, Main Pump Inlet, Long Handle, NST, VLH	1	0.00
245	0084610		Valves, Akron 8000 series- All	1	0.00
246	0004660		Inlet, Left Side, 2.50"	1	1,061.88
247	0004680		Inlet, Right Side, 2.50"	1	1,061.88
248	0520002		Valve, Inlet(s) Recessed, Side Cntrl, PUC	2	804.48
			Qty, Inlets - 2		
249	0521137		Anode, Zinc, Pair, Pump Inlets, PUC	1	0.00
250	0004700		Control, Inlet, at Valve	1	0.00
251	0092569		No Rear Inlet (Large Dia) Requested	1	0.00
252	0092696		Not Required, Cap, Rear Inlet	1	0.00
253	0064116		No Rear Inlet Actuation Required	1	0.00
254	0009648		No Rear Intake Relief Valve Required on Rear Inlet	1	0.00
255	0092568		No Rear Auxiliary Inlet Requested	1	0.00
256	0563738		Valve, .75" Bleeder, Aux. Side Inlet, Swing Handle	1	0.00
257	0520277		Tank to Pump, (1) 3.00" Valve, 4.00" Plumbing, PUC	1	0.00
258	0004910		Outlet, 2.00" Tank Fill	1	1,072.16
259	0516755		Outlet, Left Side, 2.50" (2), PUC	1	3,049.04
260	0556669		Outlet(s), RH Side, 2.50", (1), Electric Control, PUC	1	3,667.50
261	0556677		Outlet, 4.00" w/4.00" Akron Valve, Right, Electric, PUC	1	5,529.56
262	0014942		Outlet, Front, 1.50" w/2.00" Plumbing, Swivel in Bumper Tray	1	1,993.94
			Location, Outlet - d) center		
			Location, Front, Single -		
263	0516777		Outlet, Rear, 2.50", (1), Thru Tank, PUC	1	1,806.51
			Qty, Discharges -		
			Location, Outlet - a) passenger's side		
264	0537394		Not Required, Outlet, Rear, Additional, PUC	1	0.00
265	0085076		Caps for 1.50" to 3.00" Discharge, VLH	1	0.00
266	0563739		Valve, 0.75" Bleeder, Discharges, Swing Handle	1	0.00
267	0055095		Not Required, Elbow, Left Side Outlets, 2.50"	1	0.00
268	0021134		Not Required, Elbow, Right Side Outlets	1	0.00
269	0045091		Elbow, Rear Outlets, 45 Degree, 2.50" FNST x 2.50" MNST, VLH	1	0.00
270	0537395		Not Required, Elbow, Rear Outlets, Additional	1	0.00
271	0005097		Elbow, Large Dia Outlet, 30 Deg, 4.00" FNST x 5.00" Storz	1	420.42
			Qty, -		
272	0552943		Control, Outlets, Swing Handle, Elect PS Outlets, Akron 9315, Press Display, PUC	1	0.00
273	0516869		Outlet, 3.00" Deluge w/2.50" Valve, w/TFT Extend-a-Gun XG18, Foam By-pass,PUC	1	5,992.43
274	0029302		No Monitor Requested	1	0.00
275	0029304		No Nozzle Req'd	1	0.00
276	0005070		Deluge Mount, NPT	1	0.00
277	0516873		Crosslays, Low Mount, (2) 1.50", Std. Cap, W/Poly Trays, PUC	1	4,761.96
278	0527218		Crosslay, (1) 2.50" Spcl Cap, w/Poly Tray, PUC	1	3,628.86
			Capacity, Special Xlay - 200' of 3.00" Double Jacket Hose		
279	0588422		Hose Restraint, Crosslay/Deadlay, 1" Heavy Nylon Web, Fasteners, Each Side, PUC	3	431.13
			Qty, - 03		
			Type of fastener - Velcro - 1 side of crosslay/deadlay/speedlays		
			Nylon Web Color - Black		

Line	Option	Type	Option Description	Qty	Price
280	0534267	SP	Foam Sys, Husky 12, (Single Agent), PUC, Additional Discharges	1	17,163.20
			Discharge, Foam - 3 CL, Frt, PS Rr, Monitor		
281	0012126		Not Required, CAF Compressor	1	0.00
282	0552481		Refill, Foam Tank, Single Tank, Husky 12, Class A Foam	1	816.42
283	0031896		Demonstration, Foam System, Dealer Provided	1	0.00
284	0035460		Foam Tank, 30 gal Poly	1	1,578.86
			Type of Foam - Class "A"		
			Foam, Brand Name - What ever is avalible.		
285	0505016		Drain, 1.00", Foam Tank #1, Husky 12 Foam System	1	0.00
286	0091079		Not Required, Foam Tank #2	1	0.00
287	0091112		Not Required, Foam Tank Drain	1	0.00
288	0515692		Pump Operators Panel, 31", Control Zone, PUC	1	0.00
289	0032479		Pump Panel Configuration, Control Zone	1	0.00
290	0516975		Material, Pump Panels, Operators Brushed Stainless, Sides Brushed Stainless, PUC	1	0.00
291	0516978		Pump and Plumbing Access, Simple Tilt Service, PUC	1	0.00
292	0520016		Not Required, Pumphouse Structure, PUC	1	0.00
293	0520326		Light, Pump Compt, PUC	1	0.00
294	0516983		Engine Indicators, Included With Pierce Pressure Controller, PUC	1	0.00
295	0005601		Throttle Included w/ Pressure Controller	1	0.00
296	0549333		Indicators, Engine, Included with Pressure Controller	1	0.00
297	0527795		Control, Air Horn at Pump Panel w/Red Switch	1	155.68
			Discharge, Outlet Locations -		
298	0511078		Gauges, 4.00" Master, Class 1, 30"-0-600psi	1	0.00
299	0511100		Gauge, 2.00" Pressure, Class 1, 30"-0-400psi	1	0.00
300	0517009		Gauge, Water Level, Pierce, In pressure Controller, w/Mini Slave, PUC	1	1,050.51
			Activation, Water Level G - i) ignition switch		
301	0517012		Gauge, Foam Level, Pierce, PUC, PP and Mini in Cab	1	909.46
			Activation, Foam Level Gauge - ignition switch		
302	0520243		Light, Pump Operator & Panel, Side Ctrl, PUC	1	0.00
303	0066052		Air Horns, (2) Grover in Bumper Outside Frame	1	987.16
			EXCLUDED: [Location, Air Horn (bmpr)]. - Selected value: "on each side of the center bumper tray"		
304	0086064		Control, Air Horn, DS Lanyard, PS Chrome Push Button	1	386.70
305	0076128		Siren, Federal Unitrol UTM-1 with UNCT Microphone, 100 or 200 Watt	1	740.52
306	0026133		Location, Elect Siren, Saber, Location Feature	1	0.00
			Location - mounted on swivel hanging from celling		
307	0016145		Control, Elec Siren, Horn Ring, PS Push Button	1	0.00
308	0560792		Speaker, Federal ES100 with ESFMT-EF Recess Mount	1	516.50
			Qty, Speakers - 1		
			Connection, Speaker - siren head		
309	0548456		Location, Recessed in the Front Bumper, Center	1	0.00
310	0067126		Lightbar, Whelen, Freedom, FN**VLED, 4-R, 2-W, 4-RC	1	3,827.71
			Length, Win Lightbar - 72"		
311	0016380		No Additional Lights Req'd, Side Zone Upper	1	0.00
312	0076796		Lights, Front Zone, Whelen 60*02F*R LED, In Common Bezel	1	590.57
			Color,Whin Sup600 LED - a) rd/rd		
313	0079967		Lights, Side Zone Lower, Whelen 2-60*02F*R & 2-50*03Z*R LED, 2pr	1	925.08
			Location, lights rear - on the rear fender panel		
			Location, Lights Frt Side - b)each side bumper		
			Flange Kit, 2pr - w/with a flange		
			Color,Whin Sup500 LED,BCK - a) rd/rd		
			Color,Whin Sup600 LED,FRT - a) rd/rd		
314	0540777		Lights, Rear Zone Lower, Whelen M6* LED, Colored Lens	1	621.98
			Color, Lt DS Rear - r) DS Rear Lt Red		
			Color, Lt PS Rear - r) PS Rear Lt Red		
315	0541116		Lights, Rear/Side Up Zone, Whelen M6* LED, Colored Lens 4lts	1	1,202.85
			Color, Lt, Side Rer Up DS - Side Rear Upper Red		
			Color, Lt, Side Rer Up PS - Side Rear Upper Red		
			Color, Lt, Rer Up DS - r) DS Rear Upper Red		
			Color, Lt, Rer Up PS - r) PS Upper Rear Red		
316	0006551		Not Required, Lights, Rear Upper Zone Blocking	1	0.00
317	0026813		No Hose Bed Warn Light Brackets Req'd, Lights Mtd on Hatch Compts, Pumper	1	0.00

Line	Option	Type	Option Description	Qty	Price
318	0529684		Light, Traffic Directing, Whelen TAL65, 36.01" Long LED	1	1,026.69
			Activation, Traffic Dir L - Control Head Only		
319	0558348		Location, Traf Dir Lt, Recessed with Smooth Aluminum Trim	1	338.14
			Extension, Traffic Directing Light Trim - *		
320	0530266		Location, Traf Dir Lt Controller, Engine Tunnel	1	51.43
321	0076826		Cup Holder for Telescopic - Pushup - Light Pole	2	232.06
			Qty, 120/240 Volt Light - 2		
322	0086626		Receptacle, 15A 120V 3-Pr 3-Wr SB Dup, 4 place, Shoreline	3	872.41
			Location, Receptacles - D1,P3 and one in the cab officer's side on the slope of the engine tunnel		
			EXCLUDED: [Qty, Receptacles]. - 03		
			Qty, -		
323	0519934		Not Required, Brand, Hydraulic Tool System	1	0.00
324	0007150		Bag of Nuts and Bolts	1	0.00
			Qty, Bag Nuts and Bolts - 1		
325	0532883		NFPA Required Loose Equipment, Pumper, Provided by Fire Department	1	0.00
326	0540114		Soft Suction Hose, Provided by Fire Department, Pumper NFPA Classification	1	0.00
327	0545110		Strainer, Provided by Fire Department, Pumper NFPA Classification	1	0.00
328	0533269		Extinguisher, Dry Chemical, Pumper NFPA Class, Provided by Fire Department	1	0.00
329	0533278		Extinguisher, 2.5 Gal. Pressurized Water, Pumper NFPA, Provided by Fire Dept	1	0.00
330	0532921		Axe, Flathead, Pumper NFPA Classification, Provided by Fire Department	1	0.00
331	0532924		Axe, Pickhead, Pumper NFPA Classification, Provided by Fire Department	1	0.00
332	0559573		Paint, Single Color, Custom	1	0.00
			EXCLUDED: [Paint, Color]. - Selected value: "#90 Red"		
			Paint Color, Predefined -		
333	0017241		Paint Chassis Frame Assy. Black, Std.	1	0.00
334	0693797		No Paint Required, Aluminum Front Wheels	1	0.00
335	0693792		No Paint Required, Aluminum Rear Wheels	1	0.00
336	0007230		Compartment, Painted, Spatter Gray	1	0.00
337	0544129		Reflective Band, 1"-6"-1"	1	372.48
			Color, Reflect Band - A - a) white		
			Color, Reflect Band - B - l) white		
			Color, Reflect Band - C - w) white		
338	0007356		Reflective across Cab Face	1	96.93
339	0593732		Stripe, Chevron, Rear, Diamond Grade, Pumper, PUC	1	730.34
			Color, Rear Chevron DG - yellow		
340	0087342		Jog, "Z"-Shaped, In Reflective Stripe	2	584.55
			Qty, - 02		
341	0017359		Stripe, Black Outline, Vinyl on Reflective Band	3	215.63
			Qty, - 03		
342	0065687		Stripe, Reflective, Cab Doors Interior	1	132.59
			Color, Reflective - a) white		
343	0594559		Lettering Specifications, (Sign Gold Process)	1	0.00
344	0685932		Lettering, Sign Gold, 3.00", (41-60)	1	871.86
			Outline, Lettering - Outline and Shade		
345	0685796		Lettering, Sign Gold, 6.00", (41-60)	1	2,015.01
			Outline, Lettering - Outline and Shade		
346	0685803		Lettering, Sign Gold, 5.00", (21-40)	1	1,021.66
			Outline, Lettering - Outline and Shade		
347	0684199		Emblem, Maltese Cross, Sign Gold, 15"-17", Pair	1	1,066.14
			Qty, - 01		
			Location, Emblem - one each side		
348	0031972		Manuals, Two (2), Fire Apparatus Parts, Custom Chassis	1	320.68
349	0002905		Manuals, Two (2) Chassis Service, Custom	1	806.94
350	0032433		Manuals, Two (2) Chassis Operation, Custom	1	0.00
351	0030008		Warranty, Basic, 1 Year, Apparatus, WA0008	1	0.00
352	0595239		(No Pick Required)	1	0.00
353	0696698		Warranty, Engine, Cummins, 5 Year, WA0181	1	0.00
354	0684952		Warranty, Steering Gear, TRW Ross TAS, 1 Year WA0202	1	0.00
355	0596017		Warranty, Frame, 50 Year, Custom Chassis, WA0013	1	0.00
356	0595245		(No Pick Required)	1	0.00
357	0530523		Warranty, Axle, 2 Year, Meritor, General Service, WA0046	1	0.00

Line	Option	Type	Option Description	Qty	Price
358	0564751		Warranty, Axle, Eaton/Dana, 3 Year Parts and Labor, WA0184	1	0.00
359	0019914		Warranty, Structure, 10 Year, Custom Cab, WA0012	1	0.00
360	0595813		Warranty, Paint, 10 Year, Cab, Pro-Rate, WA0055	1	0.00
361	0046369		Warranty, 5-year EVS Transmission, Standard Custom, WA0187	1	0.00
362	0688798		Warranty, Water Tank, Lifetime, UPF, Poly Tank, WA0195	1	0.00
363	0596025		Warranty, Structure, 10 Year, Body, WA0009	1	0.00
364	0693127		Warranty, Gortite, Roll-up Door, 6 Year, WA0190	1	0.00
365	0516693		Warranty, Pump, Pierce, PUC, 6 Year, WA0039	1	0.00
366	0032998		Warranty, 10 Year S/S Pumbing, WA0035	1	0.00
367	0595820		Warranty, Paint, 10 Year, Body, Pro-Rate, WA0057	1	0.00
368	0595412		Warranty, Graphics Lamination, 1 Year, Apparatus, WA0168	1	0.00
369	0683627		Certification, Vehicle Stability, CD0089	1	0.00
370	0592200		Certification, Engine Installation, Saber, ISL9, CD0092, ISC8.3, CD0093	1	0.00
371	0686786		Certification, Power Steering, CD0098	1	0.00
372	0543950		Certification, Cab Integrity, Saber, CD0012	1	0.00
373	0548969		Certification, Windshield Wiper Durability, Saber, CD0007	1	0.00
374	0556828		Certification, Electric Window, Not Available	1	0.00
375	0545073		Amp Draw Report, NFPA Current Edition	1	0.00
376	0002758		Amp Draw, NFPA/ULC Radio Allowance	1	0.00
377	0000048		Engineering Attribute - PUMPER/TANKER, 3rd Gen	1	0.00
378	0000012		PIERCE CHASSIS	1	0.00
379	0004713		ENGINE, OTHER	1	0.00
380	0046395		EVS 3000 Series TRANSMISSION	1	0.00
381	0520324		PIERCE PUMP	1	0.00
382	0020009		POLY TANK	1	0.00
383	0028048		FOAM SYSTEM	1	0.00
384	0020006		SIDE CONTROL	1	0.00
385	0020007		AKRON VALVES	1	0.00
386	0020015		ABS SYSTEM	1	0.00
				Total List:	**$493,217.25**

Overview

*** Did you attend one of the workshops conducted by an AFG regional fire program specialist?**

No, I have not attended workshop

*** Did you participate in a webinar that was conducted by AFG?**

Yes

*** Are you a member, or are you currently involved in the management, of the fire department or nonaffiliated EMS organization or a State Fire Training Academy applying for this grant with this application?**

Yes, I am a member/officer of this applicant

If you answered "No", please **complete** the information below. If you answered "Yes", please skip the Preparer Information section.
Fields marked with an * are required.

Preparer Information

Preparer's Name	
Address 1	
Address 2	
City	
State	
Zip	- Need help for ZIP+4?

In the space below please list the person your organization has selected to be the primary point of contact for this grant. This should be a department officer or member of the organization who will see this grant through completion, including closeout. Reminder: if this person changes at any time during the period of performance please update this information. Please list only phone numbers where we can get in direct contact with the POC.

Primary Point of Contact

* Title	Lieutenant		
Prefix (select one)	Mr.		
* First Name	Stephen		
Middle Initial	T		
* Last Name	Newkirk		
* Primary Phone	575-377-3347	Ext.	Type work
* Secondary Phone	505-554-9195	Ext.	Type cell
Optional Phone			Type
Fax	575-377-6098		
* Email	tnewkirk@angelfirenm.gov		

Applicant's Acknowledgements

* I certify the DUNS number in this application is our only DUNS number and we have confirmed it is active in SAM.gov as the correct number.

* As required per 2 CFR ¿ 25, I certify that prior to submission of this application I have checked the DUNS number listed in this application against the SAM.gov website and it is valid and active at time of submission.

* I certify that the applicant organization has consulted the appropriate Notice of Funding Opportunity and that all requested activities are programmatically allowable, technically feasible and can be completed within the award's one (1) year Period of Performance (POP).

* I certify that the applicant organization is aware that this application period is open from 12/07/2015 to 01/15/2016 and will close at 5 PM EST; further that the applicant organization is aware that once an application is submitted, even if the application period is still open, a submitted application cannot be changed or released back to the applicant for modification.

* I certify that the applicant organization is aware that it is solely the applicant organization's responsibility to ensure that all activities funded by this award(s) comply with Federal Environmental planning and Historic Preservation (EHP) regulations, laws, and Executive Orders as applicable. The EHP Screening Form designed to initiate and facilitate the EHP Review is available at: http://www.fema.gov/media-library-data/1431970163011-80ce3cd907072a91295b1627c56d8fd2/gpd_ehp_screening_form_51815.pdf

* I certify that the applicant organization is aware that the applicant organization is ultimately responsible for the accuracy of all application information submitted. Regardless of the applicant's intent, the submission of information that is false or misleading may result in actions by FEMA that include, but are not limited to: the submitted application not being considered for award, an existing award being locked pending investigation, or referral to the Office of the Inspector General.

Signed by **Stephen T Newkirk** on **2016-01-05**

Contact Information

Alternate Contact Information Number 1

* Title	Chief
Prefix (select one)	Mr.
* First Name	Andrew
Middle Initial	
* Last Name	Bertges
* Primary Phone	575-377-2754 Ext. Type work
* Secondary Phone	505-603-0416 Ext. Type cell
Optional Phone	Type
Fax	575-377-6098
* Email	abertges@angelfirenm.gov

Alternate Contact Information Number 2

* Title	Procurement Officer
Prefix (select one)	Mr.
* First Name	Fabian
Middle Initial	
* Last Name	Mascarenas
* Primary Phone	575-377-3232 Ext. 112 Type work
* Secondary Phone	575-337-1389 Ext. Type home
Optional Phone	Type
Fax	575-377-3280
* Email	fmascarenas@angelfirenm.gov

Applicant Information

* Organization Name	Angel Fire Fire Department
* Type of Applicant	Fire Department/Fire District
* **Fire Department/District, nonaffiliated EMS, and Regional applicants**, select type of Jurisdiction Served :	Village
If "Other", please enter the type of Jurisdiction	

SAM.gov **(System For Award Management)**

* What is the legal name of your Entity as it appears in SAM.gov? Note: This information must match your SAM.gov profile if your organization is using the DUNS number of your Jurisdiction.	Village of Angel Fire

* What is the legal business address of your Entity as it appears in SAM.gov? Note: This information must match your SAM.gov profile if your organization is using the DUNS number of your Jurisdiction.

* Mailing Address 1	PO Box 610
Mailing Address 2	
* City	Angel Fire
* State	New Mexico
* Zip	87710 - 0610 Need help for ZIP+4?
* Employer Identification Number (e.g. 12-3456789) Note: This information must match your SAM.gov profile.	85-0346751
* Is your organization using the DUNS number of your Jurisdiction?	Yes
I certify that my organization is authorized to use the DUNS number of my Jurisdiction provided in this application. (Required if you selected Yes above)	☑
* What is your 9 digit DUNS number? (call 1-866-705-5711 to get a DUNS number)	832721195
If you were issued a 4 digit number (DUNS plus 4) by your Jurisdiction in addition to your 9 digit number please enter it here. Note: This is only required if you are using your Jurisdiction's DUNS number and have a separate bank account from your Jurisdiction. Leave the field blank if you are using your Jurisdiction's bank account or have your own DUNS number and bank account separate from your Jurisdiction.	
	Yes

* Is your DUNS Number registered in SAM.gov (System for Award Management previously CCR.gov)?

* I certify that my organization/entity is registered and active at SAM.gov and registration will be renewed annually in compliance with Federal regulations. I acknowledge that the information submitted in this application is accurate, current and consistent with my organization's/entity's SAM.gov record. ☑

Headquarters or Main Station Physical Address

* Physical Address 1	11 N. Angel Fire Road
Physical Address 2	
* City	Angel Fire
* State	New Mexico
* Zip	87710 - 0610 Need help for ZIP+4?

Mailing Address

* Mailing Address 1	PO Box 610
Mailing Address 2	
* City	Angel Fire
* State	New Mexico
* Zip	87710 - 0610 Need help for ZIP+4?

Bank Account Information

* The bank account being used is: (Please select one from right) — Maintained by my Jurisdiction

Note: The following banking information must match your SAM.gov profile.

* Type of bank account	Checking
* Bank routing number - 9 digit number on the bottom left hand corner of your check	102200245
* **Your account number**	37902220

Additional Information

* For this fiscal year (Federal) is your organization receiving Federal funding from any other grant program that may duplicate the purpose and/or scope of this grant request?	No
* If awarded, will your organization expend more than $750,000 in Federal funds during your organization's fiscal year? If "Yes", your organization will be required to undergo an A-133 audit. Reasonable costs incurred for an A-133 audit are an eligible expenditure and should be included in the applicant's proposed budget. Please enter audit costs only once	No

under any "Additional Funding" in the "Request Details" section of the application.

* Is the applicant delinquent on any Federal debt? No

If you answered yes to any of the additional questions above, please provide an explanation in the space provided below:

Fire Department/Fire District Department Characteristics (Part I)

* Is this application being submitted on behalf of a Federal Fire Department or organization contracted by the Federal government which is solely responsible for the suppression of fires on Federal property?	No
* What kind of organization do you represent?	Combination
If you answered "Combination", above, how many career members in your organization? (whole numbers only)	5
If you answered "Volunteer" or "Combination" or "Paid on-call", how many of your volunteer Firefighters are paid members from another career department? (whole numbers only)	30
* What type of community does your organization serve?	Rural
* Is your Organization considered a Metro Department? (Over 350 paid career Firefighters)	No
* What is the square mileage of your first-due response area? (whole number only)	29
* What percentage of your response area is protected by hydrants? (whole number only)	80 %
* In what county/parish is your organization physically located? If you have more than one station, in what county/parish is your main station located?	Colfax County
* Does your organization protect critical infrastructure?	Yes

If "Yes", please describe the critical infrastructure protected below:

Century Link, Kit Carson Electric Coop., Sewer Treatment Plant, Water Department, Northern New Mexico Propane.

* What percentage of your primary response area is for agriculture, wildland, open space, or undeveloped properties? ¿	15 %
* What percentage of your primary response area is for commercial and industrial purposes?	15 %
* What percentage of your primary response area is used for residential purposes?	70 %
* What is the permanent resident population of your Primary/First-Due Response Area or jurisdiction served? (whole numbers only)	1216
* Do you have a seasonal increase in population?	Yes
If "Yes" what is your seasonal increase in population?	10000
* How many active firefighters does your department have who perform firefighting duties? (whole numbers only)	35
* How many members in your department/organization are trained to the level of EMR or EMT, Advanced EMT or Paramedic? (whole numbers only)	15

Does your department have a Community Paramedic program?	No
How many personnel are trained to the Community Paramedic level? (whole numbers only)	
* How many stations are operated by your organization? (whole numbers only)	3
* Is your department compliant to your local Emergency Management standard for the National Incident Management System (NIMS)?	Yes
* Do you currently report to the National Fire Incident Reporting System (NFIRS)? Note: You will be required to report to NFIRS for the entire period of the grant. AFG does not require NFIRS reporting for nonaffiliated EMS Organizations and State Fire Training Academy.	Yes
If you answered "Yes" above, please enter your FDIN/FDID	07007
* How many of your active firefighters are trained to the level of Firefighter I (or equivalent)? (whole numbers only)	10
* How many of your active firefighters are trained to the level of Firefighter II (or equivalent)? (whole numbers only, include all personnel who have attained Firefighter I)	4
Are you requesting training funds in this application to bring 100% of your firefighters into compliance with NFPA 1001?	No

If you indicated that less than 100% of your firefighters are trained to the Firefighter II level and you are not asking for training funds to bring everyone to the Firefighter II level in this application, please describe in the box below your training program and your plans to bring your membership up to Firefighter II.

We currently have four firefighters trained to firefighter II and ten firefighters trained to firefighter I. We staff two IFSAC fire service instructors to help train firefighters to a firefighter I level, and we send firefighters to the New Mexico Firefighters Training Academy to obtain firefighter II. Our goal is to have all current staff to a firefighter I level in 3 years, and firefighter II 3 years after that. Our instructors are continuing to broaden their teaching capabilities to allow for more in-house training so we do not have to go out of town (approximately 200 miles to the fire academy) for all certifications.

* What services does your organization provide?

Advanced Life Support		Rescue Operational Level
Basic Life Support	Haz-Mat Operational Level	Rescue Technical Level
		Structural Fire Suppression
		Wildland Fire Suppression

* Please describe your organization and/or community that you serve.

The Village of Angel Fire is a small tourist community nestled in the southern Rock Mountains. Established in 1967, and incorporated in 1986, the Village of Angel Fire is 29 square miles with over 120 miles of gravel roads. Homes are dispersed throughout the mountainous terrain. These homes range from single family homes (some over 10,000sq ft), to multi-residential, five story hotels and condominiums. With a base elevation of 8,500 feet extending up to 10,677 feet, the terrain is heavily wooded/timber wildland urban interface. The road have grades that can exceed over 20% slope with driveways that have exceeded 50% slope, making access extremely hard, especially in the winter. Because of forest density, terrain and location, the Village is designated to be in a high to very high risk wildland fire area.
There are approximately 2,000 residential structures in Angel Fire. Of these structures a majority are only occupied a portion of the year. According to the 2010 census, Angel Fire's full time population is a mere 1,216 (mainly retired), but we experience large fluctuations in population to exceed as many as 10,000 people during peak tourist seasons. This is due to the pristine skiing and snowmobiling in the winter, nationally rated mountain bike riding, zip-lines and PGA golfing in the summer, as well as other popular activities, including hunting and lake and river trout fishing.

Angel Fire Fire Department is a combination department, made up of five full time staff and thirty volunteers. The department operates out of three fire stations; two main stations and one sub-station. We not only cover our 29 square miles, but are automatic aid for our neighboring county department, increasing our response area by another 100 square miles. Because of our terrain, we can expect travel times to be 20 to 30 minutes to travel only five miles to much of our jurisdiction. In 2014, Angel Fire Fire Department received an ISO inspection, which improved our rating to a 5, from a 7, while seeing a double in our call volume.
A goal of the department is to be as good as any in the state. The Fire Department continuously improves itself by placing training as one of its highest priorities. Though small, we offers a wide variety of services, including structural fire protection, prevention and inspection, wildland fire protection, emergency medical services (ALS), hazardous materials operations, and some technical rescue (high and low angle rope rescue, confined space, trench, vehicle and machinery extrication, ice rescue), as well as in-house training for all members and members of other departments in the area. In recent years, we have become adjunct instructors for the state fire Academy and the state university for EMS. The ability to give our staff/volunteers college credit and national accredited courses has increased of volunteers by 50% (from 20 to 30) and increasing, with interested parties every week.
Angel Fire Fire Department has an assortment of aging apparatus. Our first out engine is a 1988 E-One that has reached 28 years old and has been experiencing an increase in mechanical problems/failures. Our truck/ladder is a 2002 100' Pierce Platform, limited to the core and paved areas of the Village. Our back up pumper/wildland urban interface unit is 2011 Pierce Type 3. Though a 1000 gpm pump it does not have the storage to work as a type 1 engine and is now carrying rescue equipment due to the failure of our mini 2005 Ford 550 (6.0 diesel engine) rescue, which replaced a 1976 mid-sized rescue (out of service). A 1995 F-350 with a 750 gpm pump is acting as another back up, but has shown a total loss of oil pressure during this year's pump testing, which our mechanic feels will lead to an engine failure soon and requires an overhaul, costing more than the apparatus. In addition we have a 2008 Kenworth 500 gpm, 2000 gallon tender which we share with the streets department, and an 2007 F550 Wildland truck.

Fire Department Characteristics (Part II)

	2014	2013	2012
* What is the total number of fire-related civilian fatalities in your jurisdiction over the last three calendar years?	0	0	0
* What is the total number of fire-related civilian injuries in your jurisdiction over the last three calendar years?	0	0	0
* What is the total number of line of duty member fatalities in your jurisdiction over the last three calendar years?	0	0	0
* What is the total number of line of duty member injuries in your jurisdiction over the last three calendar years?	1	0	0
*Over the last three years, what was your organization's operating budget?	750000		
* How much of your TOTAL budget is dedicated to personnel costs (salary, overtime and fringe benefits)?	583000		
Does your department have any rainy day reserves, emergency funds, or capital outlay?	No		
If yes, what is the total amount currently set aside?			

* What percentage of your annual operating budget is derived from: Enter numbers only, percentages must sum up to 100%	2014	2013	2012
Taxes?	53 %	53 %	53 %
Bond Issues?	18 %	18 %	18 %
EMS Billing?	2 %	2 %	2 %
Grants?	1 %	1 %	1 %
Donations?	1 %	1 %	1 %
Fund drives?	0 %	0 %	0 %
Fee for Service?	25 %	25 %	25 %

* Applicants should describe their financial need and how consistent it is with the intent of the AFG Program. This statement should include details describing the applicant's financial distress, including summarizing budget constraints, unsuccessful attempts to obtain vehicle and outside funding, and proving the trouble is out of their control.

Angel Fire Fire Deparment has a limited budget every year, with the majority of the budget going towards 5 employees, basic operations and upkeep. With this being said, it leaves very little to no money available for major expenses like replacing apparatus. It has taken us over (3)three years to "save" the 10% match, and an estimate of well over 10 years to set aside enough for the remainder. The issues with the fleet will not allow us to procced that long without multiple failures.
The Village is debt heavy due to overspending in the years prior to the last depression (the good years) and are not able to borrow much money for this project. Our capital improvement plan placed the fire department near the bottom of the list for the last 8 years, while rightfully placing the failing waste water plant, sewer infrastructure and water infrastructure top of the list with over $7.0 million in needs. The Village also suffered from a catastrophic well failure, which also encumbered an additional $250k to the debt causing an emergency purchase. We would like to avoid such a situation. In addition, the Village still carries a debt on the 2002 Pierce ladder for another (5) five years.
We have looked at other options such as a grant from our state fire protection fund. Though a bit easier to receive, it is only $100000 with a 20% match. The timeline still puts us at the decade mark for replacement. Though with a balance budget, financial help from our Village is not feasible due to our debt. All our other

options have been extinguished. As part of the limited funding, Angel Fire accounts for approximately 70% of Colfax County's gross receipt tax base and sees about a 10% in return.

* How many vehicles does your organization have in each type or class of vehicle listed below? **You must include vehicles that are leased or on long-term loan as well as any vehicles that have been ordered or otherwise currently under contract for purchase or lease by your organization but not yet in your possession.** (Enter numbers only and enter 0 if you do not have any of the vehicles below.)

Type or Class of Vehicle	Number of Front Line Apparatus	Number of Reserve Apparatus	Number of Seated Riding Positions
Engines or Pumpers (pumping capacity of 750 gpm or greater and water capacity of 300 gallons or more): Pumper, Pumper/Tanker, Rescue/Pumper, Foam Pumper, CAFS Pumper, Type I or Type II Engine Urban Interface	1	1	6
Ambulances for transport and/or emergency response:	3	1	12
Tankers or Tenders (pumping capacity of less than 750 gallons per minute (gpm) and water capacity of 1,000 gallons or more):	1	0	2
Aerial Apparatus: Aerial Ladder Truck, Telescoping, Articulating, Ladder Towers, Platform, Tiller Ladder Truck, Quint	1	0	6
Brush/Quick attack (pumping capacity of less than 750 gpm and water carrying capacity of at least 300 gallons): Brush Truck, Patrol Unit (Pickup w/ Skid Unit), Quick Attack Unit, Mini-Pumper, Type III Engine, Type IV Engine, Type V Engine, Type VI Engine, Type VII Engine	2	0	6
Rescue Vehicles: Rescue Squad, Rescue (Light, Medium, Heavy), Technical Rescue Vehicle, Hazardous Materials Unit	1	0	2
Additional Vehicles: EMS Chase Vehicle, Air/Light Unit, Rehab Units, Bomb Unit, Technical Support (Command, Operational Support/Supply), Hose Tender, Salvage Truck, ARFF (Aircraft Rescue Firefighting), Command/Mobile Communications Vehicle	3	0	12

Project Description

We are requesting funding for an equipped 4x4 Pumper with a 1500 GPM pump, a 1000 gallon tank, Class A foam system, and 6kW generator. This pumper will replace or current first out pumper, a 1988 E-One. The new pumper will bring our first due pumper up to NFPA standards for fire apparatus. The current pumper has had significant problems recently, and needs major work to remain serviceable and safe. Due to the lack of a certified mechanic the first 20 years of service, some previous repairs have been questionable. Though done be volunteers with good intention, these repairs, especially wiring have caused extensive problems and "ghost" with in the unit. The following is a list of a few items we are having issues with:

- Headlights not working/periodically working.
- Batteries heat up and smoke when plugged into shoreline to charge equipment with batteries.
- Brake lights intermittent.
- Reverse beeper intermittent.
- Hard to shift into reverse.
- Overheats when responding to calls.
- Leaks antifreeze.
- Leaks oil.
- CAFS Foam system out of service.
- Automatic tire chains not working.
- Siren intermittent.
- Radio speaker does not work.
- Pump leaks water, valves in need of rebuild
- Two of the recent training exercises, truck stalled when engaging pump.
- Airbrakes leak off overnight.
- Only 2 wheel drive
- Value of the apparatus is less than $20,000, which is less than the cost of estimated repairs.
- Lap belts only

It has become a necessity to replace our first out engine as a result of two recent pump failures during training exercises, increase maintenance issues and the fact that our back up apparatus is in no better and in fact worse condition. Where the engine shut down due to unknown reasons. The said first out engine is a 1988 E-One that has served Angel Fire very well, but is now in dire need of replacement. This engine is not NFPA 1901 compliant in multiple aspects.

If awarded this grant, you will help our department by obtaining a new, very basic pumper that meets current standards, is safe to use, and is more reliable. The project budget is $600,000 including equipment, based on information from various manufacturer's estimates and other New Mexico state departments

Cost/Benefit

Obtaining a new pumper will most importantly provide means of safer transportation and more reliable fire protection in our district and surrounding districts. Having a new pumper will further improve our ISO rating, saving property owners hundreds of dollars every year. With our recent ISO rating improving to a 5, the local resort reported to be saving approximately $100,000 per year on insurance. The savings allowed the resort to invest more money into the community and build new attractions, which will in turn bring more people to town raising our gross tax receipt base. This savings is also passed on to home owners in our district. The home owners saved a little bit of money (average $150/year), boosting our funding from some and helping promote a positive outlook for the department.

A new pumper will influence our next ISO inspection as well. Along with our increased training, improved water system, we will see reduce insurance rates for most in our jurisdiction as well as helping our automatic aid departments. A single point drop has estimated to be approximately $250k/ year for the Village as a whole.

Obvious benefits is the reliability of the apparatus helping reduce the liability of a poorly functioning apparatus on scene. One life is worth any monetary cost. A critical failure, whether not being able to get to the scene or a shut down on scene could be the difference in property or even a life being saved

If this is the case, with some of the money that the resort will save on insurance, we are hoping to get assistance from Angel Fire Resort in cost sharing for an additional station, which will also positively impact our ISO ratings. With all this being said, the cost of the engine would pay for itself in just a couple of years.

Additionally, having a new pumper that is safe and reliable could also be used as a tool to boost volunteer membership in our community. Having adequate equipment to do our jobs will help boost the morale of the department as a whole.

Statement of Effect

Obtaining this new pumper will allow us to spend less time with vehicle repairs and maintenance problems and utilizing more of our time directly towards the community. The result of this project will allow us to concentrate more on fire prevention and public safety, and less time working on the

equipment to ensure it will be ready for the next call. Our current pumper, as said before, has had two recent untraceable failures during training exercises and it goes without saying that this is a major safety issue and a hindrance to providing adequate fire protection/suppression practices. In addition, our current pumper is only 2 wheel drive, which has not been able to be properly placed on 3 recent incidents due to traction issues as well as not being able to proceed on some of our road to even reach the scene. The new 4x4 pumper will allow us to provide a much more reliable means of fire protection during times of snow an inclement weather. It will help provide even more pride in the department for our volunteers, to reward all the hard work we have been doing, by giving them an apparatus that will perform the right way and eliminate the fear of failure on scene. We would now be able to focus on the task at hand and not another problem with the apparatus.

Angel Fire Fire Department, one of two full time fire departments in the county, provides mutual/automatic aid to the neighboring fire districts. Having a new pumper will allow for much more reliable and effective means of coverage in our district, as well as neighboring districts. Personnel at the station often allows us to be first on scene for our neighbors. Many of their personnel show up in personal vehicles and join our engine crew to establish command and provide additional companies utilizing equipment off the engine. Many times we will work with only our engine for smaller incidents.

COUNCIL AGENDA ITEM

STAFF RECOMMENDATION

MEETING DATE: 1/12/2016

TO: Mayor / Council and Village Manager

FROM: Fabian Mascarenas

SUBJECT: General Engineering Services

Background/Facts : The Village is requesting competitive qualification based sealed proposals for the selection of a Professional Engineering Firm to provide Grants Consulting, Planning, Design Services, and Engineering for the Village of Angel Fire, under a retainer agreement. Applicants must be licensed professional engineers in the State of New Mexico.

Alternatives: - None

1) **Financial Impact and Review**:
   Financial Impact:
   Budgeted Item: : YES
   Funding Source: N/A

   Finance Department Comments and Review:

   1/7/16

   Finance Directors Signature

2) **Attached Documents: RFP**

3) **Staff's Recommended Motion: MOTION TO APPROVE RFP REQUEST**

4) **Village Manager's Recommendation:**

   Approval: ✓ **Disapproval:** _____ **other:** _____

Manager's Comments:

Signature: _____

COUNCIL AGENDA ITEM

STAFF RECOMMENDATION

MEETING DATE: January 12, 2016

TO: Mayor / Council and Village Manager

FROM: Tracy Orr

SUBJECT: Accept Contract with Forest Guild for the update of our Community Wildfire Protection Plan

---

Background/Facts : The Village of Angel Fire received a grant for $15,000 through the 2015-2016 Wildfire Risk Reduction Grant Program for the update of our CWPP. The Village of Angel Fire submitted a Request for Quotes for this project and received two responses. Forest Guild quoted $14,000 and Anchor Point quoted $18,000. We have selected Forest Guild to update the CWPP.

Alternatives: N/A

1) **Financial Impact and Review**:

Financial Impact: Yes
Budgeted Item: __yes __X __no
Funding Source: Grant Funds plus 10% in-kind match
Finance Department Comments and Review:
If needed paid from 525 fund

1/2/17
Finance Directors Signature

2) **Attached Documents: Copy of contract for the Village of Angel Fire and the Forest Guild**

---

3) **Staff's Recommended Motion: Motion and second to approve the contract between Village of Angel Fire and Forest Guild.**

---

4) **Village Manager's Recommendation:**

Approval: ✓ **Disapproval:** _____ **other:** _____

Manager's Comments:

Signature: _____

AGREEMENT FOR SALE OF SERVICES

THIS AGREEMENT FOR SALE OF SERVICES (the "Agreement") is made on this 12th day of January, 2016 by and between the FOREST STEWARDS GUILD, a New Mexico nonprofit corporation ("the Guild") and the VILLAGE OF ANGEL FIRE ("the Village"), a municipality located in Colfax County.

RECITALS

A. The Village desires to engage the Guild to perform certain services as an Independent Contractor.

B. The Guild desires to perform the services described in Paragraph 1, as set forth in this Agreement.

AGREEMENTS

NOW, THEREFORE, in consideration of the premises, the agreements and undertakings of the parties set forth below, and for other good and valuable consideration, the receipt and sufficiency of which are hereby acknowledged, the parties agree as follows:

1. WORK TO BE PERFORMED BY THE GUILD.

During the term of this Agreement, the Guild shall perform the work (the "Work") described on **Exhibit A** attached hereto. The Guild shall complete the various specified tasks comprising the Work within the deadline(s) stated on **Exhibit A**. The Guild shall perform the Work in a competent and professional manner to the best of the Guild's abilities using the Guild's own appropriate independent skill and judgment and the manner and means that appear best suitable to it to perform the Work.

2. ALLOWABLE COMPENSATION.

The Guild shall receive compensation for the Work, which shall not exceed fourteen thousand dollars ($14,000), [This compensation does not include the following which are currently unknown, but which will or may become due and owing, and which shall be added to the Guild's compensation for the Work:

a. Actual cost of the following goods and materials, which, because of the volatility of prices, shall be reimbursed on actual cost basis.

b. Any unknown conditions, which in the Guild's sole discretion, will render the current compensation impossible or unfeasible. In such instance, the Guild will immediately notify the Village of the unknown condition and provide an estimate of the increased cost for such unknown condition. The parties may then agree to modify the compensation or terminate the Agreement pursuant to paragraph 5 of this Agreement.

3. BILLING PROCEDURES.

The Forest Guild shall submit invoices to the Village on a monthly basis and/or upon completion of the Work. Each invoice shall provide the name, address, date(s) and description of the Work and the amount of compensation as set forth in this Agreement.

Within two weeks from receipt of the invoice from the Guild, the Village shall mail to the Guild a check for the amount requested in the invoice.

4. INDEMNIFICATION. The Village shall indemnify, hold harmless or insure the Guild including its officers, employees or agents, against liability, claims, damages, losses or expenses, including attorney fees, to the extent that the liability, damages, losses or costs are caused by, or arise out of, the acts or omissions of the Village or its officers, employees or agents.

5. CONTRACT TERM.

The term of this Agreement shall commence on January 20, 2016 and shall terminate on May 30, 2016; provided however, either party may terminate this Agreement upon thirty (30) days written notice to the other. Upon any such termination, the Guild shall receive reasonable compensation for all work incurred through the date of termination for which the Guild has not received compensation, and reasonable costs to clear the site or other efforts to shut down the project. Said amounts shall be based on the proportion of work performed for any of the tasks described on Exhibit A attached hereto.

6. DEFAULT.

Notwithstanding anything to the contrary, in the event of a material breach of this Agreement by a party (the "Defaulting Party"), the other party (the "Nondefaulting Party") may terminate this Agreement if after ten (10) days written notice to the Defaulting Party any such breach has not been cured. In any such notice, the Nondefaulting Party shall describe the breach of the Agreement constituting the grounds for termination. In the event of any such termination, the Nondefaulting Party shall reserve all rights, remedies and claims against the Defaulting Party.

7. DISPUTE RESOLUTION.

If a dispute arising concerning the Work of Guild, including whether payment for such Work is due, the parties shall use a mediator, who will inspect the Work and determine what, if any, corrections or performance is necessary. The parties agree that Mediator's determination is final. The Village shall not withhold payment to Guild if there is a dispute concerning the Work or payment therefrom; rather, the Village shall tender the disputed amount to the Mediator, who shall determine whether and when the Work is completed and payment is due. The parties agree to split the cost of Mediator's time, and hold harmless Mediator.

Except for any claim for payment against a surety bond, all other disputes, arising under, out of, in connection with, or in relation to this Agreement, or the making or validity thereof, or

its interpretation, or any breach thereof, shall be determined and settled by arbitration in Santa Fe, New Mexico, pursuant to Uniform Arbitration Act, 1978 NMSA, §§44-7A-1 et Seq. Any award rendered shall be final and conclusive upon the parties, and a judgment thereon may be entered in the highest court of the forum, whether state or federal, having jurisdiction. The party ultimately prevailing shall be entitled to its costs and reasonable attorneys' fees in connection with such arbitration and the enforcement thereof.

8. INDEPENDENT CONTRACTOR.

The Guild is retained only for the purposes and to the extent set forth herein and the Guild's relationship to the Village shall be that of independent contractor.

9. ASSIGNMENT.

Neither party shall assign, transfer, delegate, subcontract or otherwise transfer any rights under this Agreement or any of the duties, responsibilities, obligations or liabilities hereunder, without the prior written permission of the other party.

10. REPRESENTATIVES.

The Guild representative to whom all communication should be directed with regard to this Agreement is **Matt Piccarello** and with regard to the Work to be performed hereunder is **Matt Piccarello.**

The Village representative to whom all communication should be directed with regard to this Agreement is **Andy Bertges**, and with regard to the Work to be performed hereunder is **Andy Bertges.**

11. NOTICES. All notices and communications required or permitted under this Agreement shall be in writing and shall be deemed given and delivered to, and received by, the receiving party

(a) when hand-delivered to the street address of the receiving party set forth below;

(b) when sent by facsimile transmission to the telephone number of the receiving party set forth below;

(c) one day after deposit with a national overnight courier addressed to the receiving party at the street address set forth below; or

(d) three (3) days after deposit in the U. S. mail, certified mail, return receipt requested, postage prepaid, addressed to the receiving party at the mailing address set forth below.

Any party may change the address and facsimile telephone number set forth below upon giving notice thereof to the other party(ies) in accordance herewith.

THE FOREST STEWARDS GUILD
Attn: Matt Piccarello

Physical Address:
2019 Galisteo St. Suite N-7
Santa Fe, New Mexico 87505

Telephone No.:
(505) 983-8992 x 14

Facsimile No.:
(505) 986-0798

VILLAGE OF ANGEL FIRE
Attn: Andy Bertges

Street Address:
3388 Mountain View Blvd.
Angel Fire, NM 87710

Mailing Address:
P.O. Box 217, Angel Fire, NM 87710
Telephone No.:
(575) 377-3232
Facsimile No.:
(575) 377-3280

11. MISCELLANEOUS.

(a) *Recitals*. Each and all of the recitals set forth at the beginning of this instrument are hereby incorporated herein by this reference.

(b) *Exhibits*. Each and all of the Exhibits stated herein and attached hereto are hereby incorporated herein by this reference.

(c) *Calculation of Time*. Any time period herein calculated by reference to "days" shall mean calendar days, i.e. including Saturdays, Sundays and federally recognized holidays; provided, however, that if a time period designated in this Agreement expires on a Saturday, Sunday or federally recognized holiday, the applicable time period shall be automatically extended until the next day that is not a Saturday, Sunday or federally recognized holiday.

(d) *Captions*. The captions and paragraph headings of this Agreement are not necessarily descriptive, or intended or represented to be descriptive, of all the provisions thereunder, and in no manner shall such captions and paragraph headings be deemed or interpreted to limit the provisions of this Agreement.

(e) *Counterparts*. This Agreement may be executed through the use of separate signature pages or in any number of counterparts, and each of such counterparts shall, for all purposes, constitute one agreement binding on all the parties, notwithstanding that all parties are not signatories to the same counterpart.

(f) *Facsimile Transmission*. Copies of this instrument, and any and all amendments hereto, which are signed and delivered by each party and produced and/or reproduced by facsimile transmission, shall be valid and binding upon each signatory party.

(g) *Severability*. If any provisions of this Agreement, or the application of such provisions to any person or circumstances, shall be held invalid, the remainder of this Agreement, or the application of such provisions to persons or circumstances other than those to which it is held invalid, shall not be affected thereby.

(h) *Governing Law*. This Agreement and the rights of the parties shall be governed by and construed in accordance with the laws of the State of New Mexico.

(i) *Modification*. Any modification of this Agreement must be made in writing and must be executed by the parties.

(j) *Binding Effect*. This Agreement shall be binding upon and inure to the benefit of the parties and their respective heirs, successors and assigns.

(k) *Entire Agreement*. This Agreement constitutes the entire agreement between the parties and any other prior agreements between the parties, written or oral, are merged herein.

(l) *Force Majeure.* The Guild is not liable for a failure to perform the Work if such failure is a result of Acts of God (including fire, flood, earthquake, storm, hurricane or other natural disaster), war, invasion, act of foreign enemies, hostilities (regardless of whether war is declared), civil war, rebellion, revolution, insurrection, military or usurped power or confiscation, terrorist activities, nationalisation, government sanction, blockage, embargo, labor dispute, strike, lockout or interruption or failure of electricity or other raw materials and goods.

IN WITNESS WHEREOF, the parties have executed this Agreement as of the date first set forth above.

THE FOREST GUILD,
a New Mexico nonprofit corporation

By _____
Eytan Krasilovsky
Southwest Director

THE VILLAGE OF ANGEL FIRE,
a New Mexico municipality

By _____
Name: Andy Bertges
Title: Village of Angel Fire Fire Chief

LIST OF EXHIBITS

Exhibit	Description
Exhibit A	Description of Work
Exhibit B	The Forest Guild's Compensation for Work
Exhibit C	Form of Amendment to Agreement

EXHIBIT A
(Description of Work)

Forest Guild will provide the following services for an update to the Village of Angel Fire Community Wildfire Protection Plan:

I. The update will conform to the original CWPP guidance identified in the Handbook (2004) and will integrate the new CWPP guidance developed by a collaborative group led by the New Mexico Association of Counties that includes NM State Forestry, Bureau of Land Management, and the Forest Stewards Guild. The new guidance for CWPP updates includes recommendations to build wildfire response and recovery into CWPPs.

II. Meet with Village of Angel Fire to fine-tune work plan and timeline and identify points of contact for the project and Core Team.

III. Establish project web page

IV. Convene at least two community meetings to gather community input and share draft plans.

V. Convene at least three Core Team meetings to collect information and to draft and review the CWPP update.

VI. Convene home-site risk assessment training for AFFD and Wildfire Committee

VII. Deliver draft CWPP update document for Village of Angel Fire and Core Team review and comment.

VIII. Incorporate comments and develop final plan ready for signatures, particularly those from the Village of Angel Fire and NM State Forestry.

EXHIBIT B
(Forest Guild's Compensation for Work)

The Forest Guild shall be compensated as follows for the Work set forth in **Exhibit A**.

Forest Stewards Guild salaries and benefits	$	10,500
Travel to Angel fire for Core Team, Community, and general meetings.	$	800
Printing and materials	$	320
Indirect	$	2,380
TOTAL	**$**	**14,000**

Village of Angel Fire
P.O. Box 610
Angel Fire, New Mexico 87710

QUOTE SHEET

Requisition # 10-15-15

Date: Andy Bertges

Requested By:

	Vendor 1	Vendor 2	Vendor 3	Vendor 4
NAME	Forest Guild	Anchor Point	IMS	
ADDRESS	2019 Galisteo St Ste N7 Santa Fe NM 87505	2131 Upland Ave Boulder, CO 80304	945 Hornblend St, Suite G San Diego, CA 92109	
Telephone:	505-983-8992	303.665.3473	(858) 490-8817	
Salesperson:	Eytan Krasilovsky	Chris White	Dean Wittke	

Item No.	Description	Quantity	Unit	Vendor 1 Unit Price	Vendor 1 Amount	Vendor 2 Unit Price	Vendor 2 Amount	Vendor 3 Unit Price	Vendor 3 Amount	Vendor 4 Unit Price	Vendor 4 Amount
1	CWPP Update				14,000.		18,000.				
Shipping Costs:											
Justification:		Total Price:		14,000.		18,000.		No response			
		Terms:									
		Delivery Date		July 2016		4 months					
		Procurement Review									

ON BEHALF OF (AGENCY): *Village of Angel Fire*

I HEARBY CERTIFY I HAVE VERIFIED THE RESIDENT STATUS OF THE ABOVE VENDORS, ACCORDING TO THE STATE PURCHASING AGENT. HAVING THUS DETERMINED THE APPARENT LOW QUOTE, I FURTHER CERTIFY I HAVE VERIFIED THE ACCURACY AND COMPLETENESS OF THAT QUOTE.

Signature: Christine Breault Date: 10/15/15

COUNCIL AGENDA ITEM

STAFF RECOMMENDATION

MEETING DATE: January 12, 2016

TO: Mayor / Council and Village Manager

FROM: Tracy Orr

SUBJECT: Accept Angel Fire Public Improvement District (PID) as our fiscal agent for the Severance Tax Bond

Background/Facts : The Village of Angel Fire has a $70,000 allocation from Representative Nick Salazar through a Severance Tax Bond. Because our previous audit was qualified, we were ineligible to be our own fiscal agent. We approached the Angel Fire Public Improvement District (PID), who agreed to serve as the Village's fiscal agent. The PID will be charging 4% to act as our fiscal agent. The 4% will be paid out of pocket from the Village to the PID.

Alternatives: N/A

1) **Financial Impact and Review**:

Financial Impact: Yes
Budgeted Item: _X_yes __ ___no
Funding Source: Severance Tax Bond

Finance Department Comments and Review:

1/7/16
Finance Directors Signature

2) **Attached Documents: Memorandum of Understanding**

Staff's Recommended Motion: Motion and Second to approve Angel Fire Public Improvement District as a fiscal agent for the Village of Angel Fire for the $70,000 allocation from Representative Nick Salazar.

3) **Village Manager's Recommendation:**

Approval: ✓ Disapproval: _____ other: _____

Manager's Comments:

Signature:

INTERGOVERNMENTAL
MEMORANDUM OF UNDERSTANDING BETWEEN THE
VILLAGE OF ANGEL FIRE, NEW MEXICO
AND THE
ANGEL FIRE PUBLIC IMPROVEMENT DISTRICT
FOR CAPITAL OUTLAY FISCAL AGENCY SERVICES

THIS INTERGOVERNMENTAL Memorandum of Understanding (MOU) is entered into this 8th day of January, 2016, between the Village of Angel Fire, New Mexico (Village), a municipal corporation, and the Angel Fire Public Improvement District (AFPID), a political subdivision of the State of New Mexico.

WHEREAS, the Village anticipates receipt of Seventy Thousand Dollars ($70,000) from the proceeds of a severance tax bond sale to be conducted by the New Mexico Department of Transportation to fund various capital outlay projects (Capital Outlay); and

WHEREAS, it is the intent of the Village to use such Capital Outlay to make improvements to North Angel Fire Road, Angel Fire, New Mexico (the Road Project); and

WHEREAS, North Angel Fire Road serves portions of the AFPID subdivisions; and

WHEREAS, it is the intent of the Village that the North Angel Fire Road improvements be accomplished by a third-party contractor in accordance with the terms and conditions of any contract between the Village and the third-party contractor. The AFPID shall not be a party to the contract for road improvements between the Village and any third-party contractor; and

WHEREAS, the Village desires to engage the AFPID to provide fiscal agency services for the anticipated Capital Outlay; and

WHEREAS, the Local Government Division (LGD) of the New Mexico Department of Finance and Administration encourages the use of intergovernmental service agreements as appropriate to ensure the efficient procurement of inter-agency services, and has affirmed that

the AFPID is well positioned, approved and authorized to serve as fiscal agent for the Village for the anticipated Capital Outlay; and

WHEREAS, the AFPID is agreeable to undertaking the fiscal agency services required by the Village in accordance with the terms and conditions of this Intergovernmental Memorandum of Understanding.

NOW, THEREFORE, the Village and the AFPID agree as follows:

A. PROVISION OF FISCAL AGENCY SERVICES. The AFPID agrees to provide fiscal agency services in connection with the Capital Outlay due the Village for the Road Project, as appropriated by the New Mexico Legislature for utilization by the Village, to include the following project:

Appropriation ID	Project Title	Amount	State Agency	Reversion Date

Other projects may be included as subsequently appropriated and awarded by the State Legislature and as may be agreed upon by written amendment to this MOU.

B. SCOPE OF WORK. The AFPID's services in support of the above stated services shall include the following:

1. AFPID Fiscal Agency Services:
   (a) Ensure that the Capital Outlay proceeds are expended and accounted for in compliance with all applicable laws and regulations;
   (b) Ensure the Capital Outlay proceeds are deposited in a federally insured banking institution, in a sub-account which is separately e and apart from any accounts of the AFPID;
   (c) As it concerns the Capital Outlay proceeds, act as liaison between the Village and any appropriate New Mexico state agencies;

(d) Provide technical assistance regarding the Road Project capital outlay process, and report, as necessary, to the appropriate state agencies;

(e) Review and approve, in a timely manner, Road Project invoices submitted by the third-party contractor to the Village;

(f) Review and approve, in a timely manner, Road Project invoices submitted by the Village to the AFPID, for ultimate submittal to the appropriate state agency;

(g) Submit such Road Project invoices to the appropriate state agency;

(h) Distribute any proceeds received from the state agency, less the AFPID administrative fee, to the Village; and

(i) Act as a facilitator if disagreement arises between the Village and any state agency.

2. Village Responsibilities and Representations. As it concerns the Road Project, Capital Outlay, and the retention of any third-party contractor, the Village understands it remains absolutely responsible for executing and complying with all applicable laws and regulations and grant agreement requirements (if any) such as flow down provisions, procurement responsibilities and contractor/subcontractor management, as well as project, grant, and financial management and reporting. Further, the Village agrees to assume any and all responsibility for payment of federal, state, and local taxes and contributions imposed or required under Social Security, Workers Compensation and other applicable laws and regulations.

C. TERM: Work pursuant to this Agreement shall be effective no sooner than January 8, 2016, and be completed no later than September 30, 2016, except as may be amended and mutually agreed upon in writing.

D. COMPENSATION:

1. The AFPID agrees to provide the aforementioned services for an administrative fee of Four Percent (4%) of the dollar amount(s) of the Capital Outlay proceeds appropriated to the Village. Such fee shall be subtracted from any distributions made by the AFPID to the Village, or, as the parties may otherwise require.

2. Records. The AFPID shall maintain appropriate records of services rendered during this MOU term and retain them for a period of three (3) years after the Road Project is completed.

E. ACCESS TO INFORMATION: The parties agree that the Village shall provide the AFPID contemporaneous copies of all invoices, reports or other submittals generated by the Village or its third-party contractor as the same are submitted to the Village or generated by the Village.

F. OWNERSHIP OF PROJECT: All documents, capital improvements and project assets produced or constructed with Capital Outlay proceeds shall be the sole responsibility and property of the Village, which shall assume full administrative and physical responsibility for the life of the Road Project.

G. LIABILITY:

1. Both Parties are governmental entities, subject to the Tort Claims Act, Sections 41-4-1 et seq. NMSA 1978, and are entitled to all of the immunities, limitations and defenses provided for in the Tort Claims Act. Nothing in this MOU is intended to waive any of the immunities, limitations and defenses of the parties under the Tort Claims Act. This MOU shall not create a general liability of the constituent members of the AFPID.

2. The Village shall defend, indemnify, release and hold harmless the AFPID, to the extent permitted by the laws and constitution of the state of New Mexico, from and against any and all liability, loss, damage, claims, demands, costs and expenses of whatsoever nature, including court costs and attorney's fees, which may result from injury to or death of persons, or to destruction of property which in any way whatsoever is due to or arises as a result of this MOU or the Road Project except to the extent that such liability, loss, damage, claim, demand, cost and expense arises as a result of the AFPID's negligence or willful misconduct.

H. MODIFICATION: Any modifications or amendments to this MOU shall be in writing, signed by both parties. This MOU may be terminated by either party upon thirty (30) days written notice to the other.

I. PENALTIES: The Procurement code, § 13-1-28 through § 13-1-199, NMSA 1978, imposes civil and criminal penalties for its violation. In addition, the New Mexico criminal statutes impose felony penalties for illegal bribes, gratuities and kickbacks.

J. NOTICES: Any notice to be given to either party in accordance with this MOU shall be in writing and shall be delivered in person, by courier service, by facsimile or by U.S. mail, either first class or certified, return receipt requested, postage prepaid as follows:

To the Village:

To the AFPID:

Attn: District Administrator
Angel Fire Public Improvement District 2007-1
PO Box 1046
Angel Fire, NM 87710
575-377-3483

IN WITNESS WHEREOF, the parties affix their signatures below:

VILLAGE OF ANGEL FIRE, NEW MEXICO

By:_____ Date:_____
Mayor/Village Manager

ANGEL FIRE PUBLIC IMPROVEMENT DISTRICT

By: Don G Borgeson Date 1-7-2016
Don Borgeson, Chairman Pro-tem

PUBLIC IMPROVEMENT DISTRICT NO. 2007-01
IN THE VILLAGE OF ANGEL FIRE, NEW MEXICO

RESOLUTION NO. 2016-01

WHEREAS, pursuant to Sections 5-11-1 through 5-11-27, NMSA 1978 as amended (the Public Improvement District Act), the Village of Angel Fire, New Mexico (the "Village") adopted Resolution No. 2008-07 creating the Village of Angel Fire Public Improvement District No. 2007-1; and

WHEREAS, the Village anticipates receipt of proceeds from a severance tax bond sale to be conducted by the New Mexico Department of Transportation to fund various capital outlay projects (Capital Outlay); and

WHEREAS, it is the intent of the Village to use such Capital Outlay to make improvements to North Angel Fire Road, Angel Fire, New Mexico (the Road Project); and

WHEREAS, North Angel Fire Road serves portions of the AFPID subdivisions; and

WHEREAS, it is the intent of the Village that the North Angel Fire Road improvements be accomplished by a third-party contractor in accordance with the terms and conditions of any contract between the Village and the third-party contractor. The AFPID shall not be a party to the contract for road improvements between the Village and any third-party contractor; and

WHEREAS, the Village desires to engage the AFPID to provide fiscal agency services for the anticipated Capital Outlay; and

WHEREAS, the Local Government Division (LGD) of the New Mexico Department of Finance and Administration has affirmed that the AFPID is well positioned, approved and authorized to serve as fiscal agent for the Village for the anticipated Capital Outlay; and

WHEREAS, the AFPID is agreeable to undertaking the fiscal agency services required by the Village.

NOW THEREFORE BE IT RESOLVED BY THE ANGEL FIRE PUBLIC IMPROVEMENT DISTRICT BOARD THAT:

1. The attached Intergovernmental Memorandum of Understanding between the Village of Angel Fire, New Mexico and the Angel Fire Public Improvement District for Capital Outlay Fiscal Agency Services is approved.

PASSED, APPROVED, AND ADOPTED by the Public Improvement District Board on this 7th day of January 2016.

Don Borgeson, Chairman Pro-tem

ATTEST:

District Administrator

District Clerk